NEXX BURGER

2940 E CHAPMAN AVE, ORANGE, CA 92869

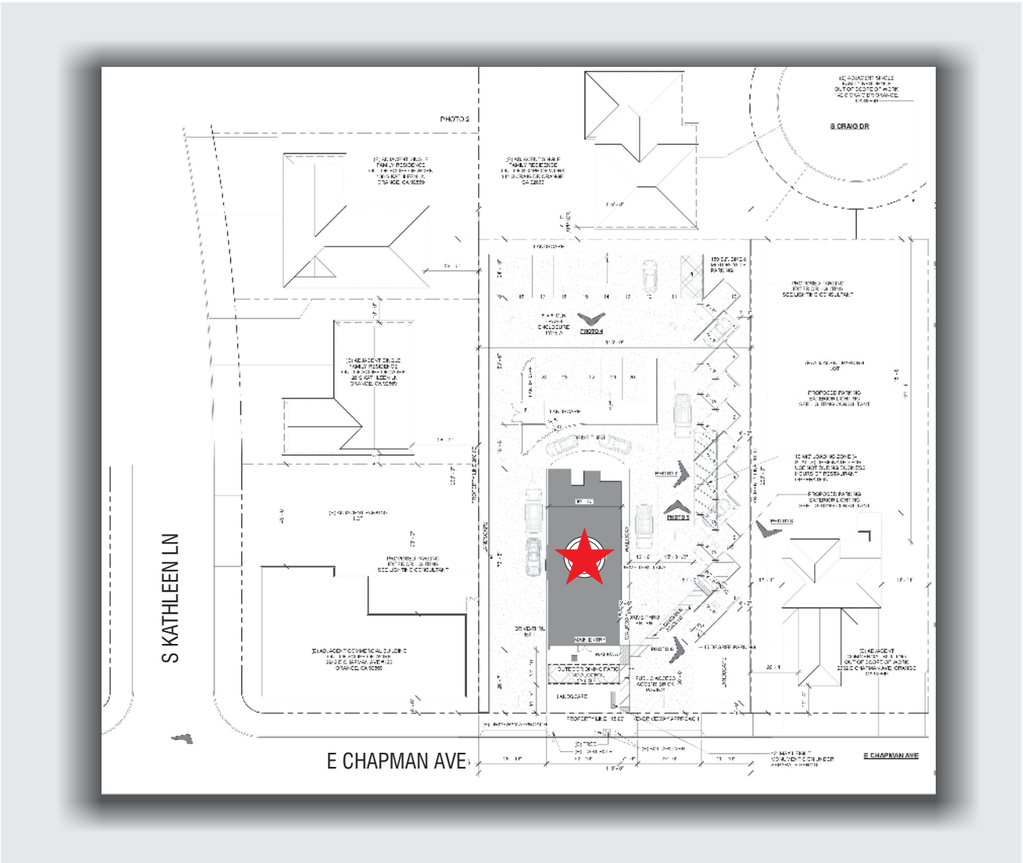

1 **VICINITY MAP**

SCALE: 1/64" = 1' - 0"

superior electrical advertising

1700 West Anaheim Street
Long Beach, California
90813-1195
Phone: 562.495.3808
Facsimile: 562.435.1867

www.superiorsigns.com

Project:
Nexx Burger

Address:
2940 E. Chapman Ave.
Orange, CA

Account Manager:
Stan Janocha

Scale: **AS NOTED** T.A.: **3.50**

Design No.:
19-11-6189-08

Reg. No.:

Revision History:
R0 11/19/19 CV New Drawing
R1 12/27/19 CV Revised per email
R2 3/4/20 mdm (1.5) add new site plan and elevations
R3 3/13/20 mdm (1.0) change pole sign, reposition menu.
R4 7/2/20 CV (1.0) changes made per emails.
R5 7/8/20 LR (1.25) New site plan
R6 10/13/20 mdm (1.25) New site plan,
R7 1/20/21 LR (2) Del G1 from tower and decrease logo on directional
R8 2/16/21 mdm (1.25) New site plan

ELECTRIC SIGN

This sign is intended to be installed in accordance with the requirements of Article 600 of the National Electrical Code and/or other applicable local codes. This includes proper grounding and bonding of the sign.

• CONSTRUCTION APPROVALS •

Acct. Mgr: Date:

Design: Date:

Mfg/QC: Date:

This is an original unpublished drawing created by Superior Electrical Advertising, Inc. It is submitted for your approval. It is not to be shown to anyone outside of your organization, nor is it to be reproduced, copied or exhibited in any fashion. The changing of colors, sizes, materials or illumination method does not alter the design. Ownership of this design is held by Superior Electrical Advertising, Inc. Authorization to use this design in any fashion must be obtained in writing from Superior Electrical Advertising, Inc.

© SEA 2019

Note: The colors depicted here are a graphic representation. Actual colors may vary. See color specifications.

SIGN SCHEDULE

NO.	DESCRIPTION	ILLUM.	AREA	QUANT.	TOTAL
A	CHANNEL LOGO	Y	58.78	1	58.78
B	CHANNEL LOGO	Y	36.00	1	36.00
C	PRE-MENU & MENU BOARD	Y	--	2	--
D	C.O.D. CANOPY SIGN	N	--	1	--
E	DRIVE-THRU CLEARANCE SIGN	N	--	1	--
F	DIRECTIONAL	Y	5.5	1	5.5
G	LED BORDER TUBE	Y	--	2	--
H	ILLUMINATED POLE SIGN	Y	95.51	1	95.51
I	CHANNEL LOGO	Y	31.00	2	31.00
J	DIRECTIONAL	Y	5.5	1	5.5
					232.29

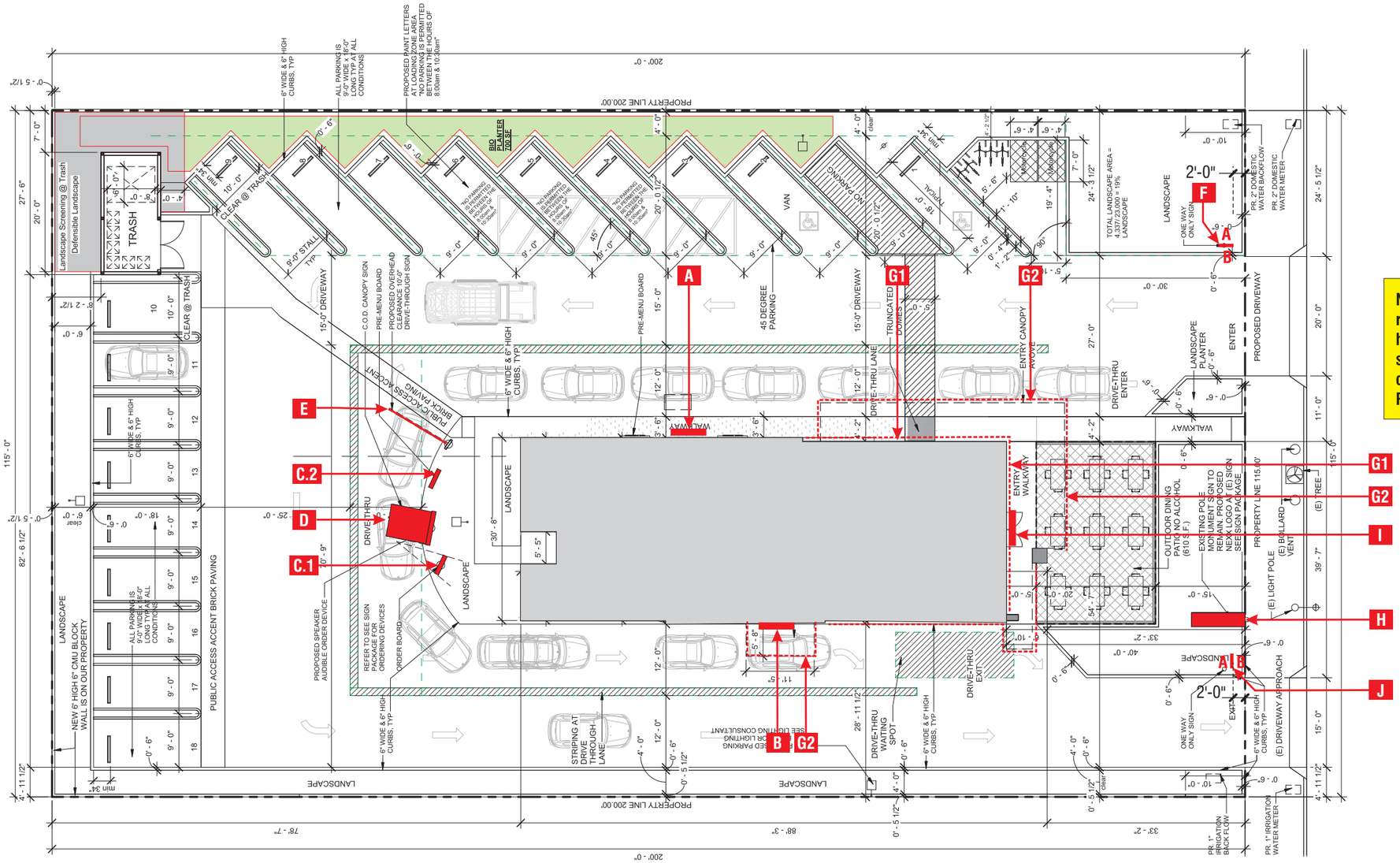

1 **SITE MAP**

SCALE: 1" = 20'-0"

Note: LED bars (G1 and G2) may remain on the north elevation; however the lighting intensity shall not exceed one-half foot candle at the property line. Product is dimmable.

superior electrical advertising

1700 West Anaheim Street
Long Beach, California
90813-1195
Phone: 562.495.3808
Facsimile: 562.435.1867

www.superiorsigns.com

Project:
Nexx Burger

Address:
2940 E. Chapman Ave.
Orange, CA

Account Manager:
Stan Janocha

Scale: **AS NOTED** T.A.: **3.50**

Design No.:
19-11-6189-08

Reg. No.:

Revision History:
R0 11/19/19 CV New Drawing
R1 12/27/19 CV Revised per email
R2 3/4/20 mdm (1.5) add new site plan and elevations
R3 3/13/20 mdm (1.0) change pole sign, reposition menu.
R4 7/2/20 CV (1.0) changes made per emails.
R5 7/8/20 LR (1.25) New site plan
R6 10/13/20 mdm (1.25) New site plan,
R7 1/20/21 LR (2) Del G1 from tower and decrease logo on directional
R8 2/16/21 mdm (1.25) New site plan

ELECTRIC SIGN

This sign is intended to be installed in accordance with the requirements of Article 600 of the National Electrical Code and/or other applicable local codes. This includes proper grounding and bonding of the sign.

• CONSTRUCTION APPROVALS •

Acct. Mgr: Date:

Design: Date:

Mfg/QC: Date:

This is an original unpublished drawing created by Superior Electrical Advertising, Inc. It is submitted for your approval. It is not to be shown to anyone outside of your organization, nor is it to be reproduced, copied or exhibited in any fashion. The changing of colors, sizes, materials or illumination method does not alter the design. Ownership of this design is held by Superior Electrical Advertising, Inc. Authorization to use this design in any fashion must be obtained in writing from Superior Electrical Advertising, Inc.

© SEA 2019

Note: The colors depicted here are a graphic representation. Actual colors may vary. See color specifications.

NORTH

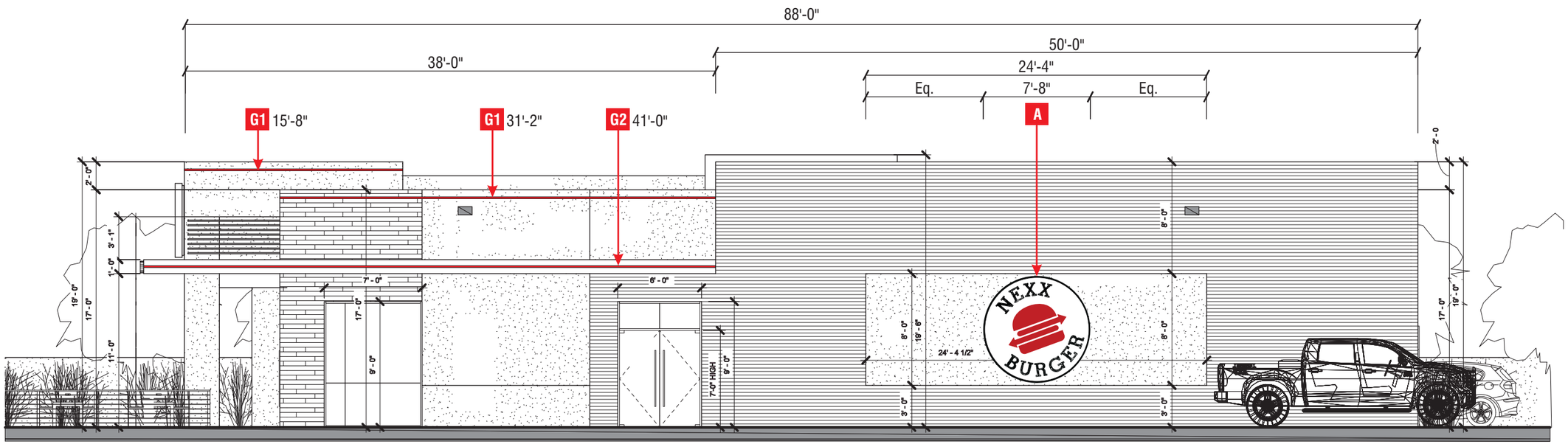

1 **WEST ELEVATION**
SCALE: 1/8" = 1'-0"

G1 TOTAL LENGTH: 38'-0" G2 TOTAL LENGTH: 41'-0"

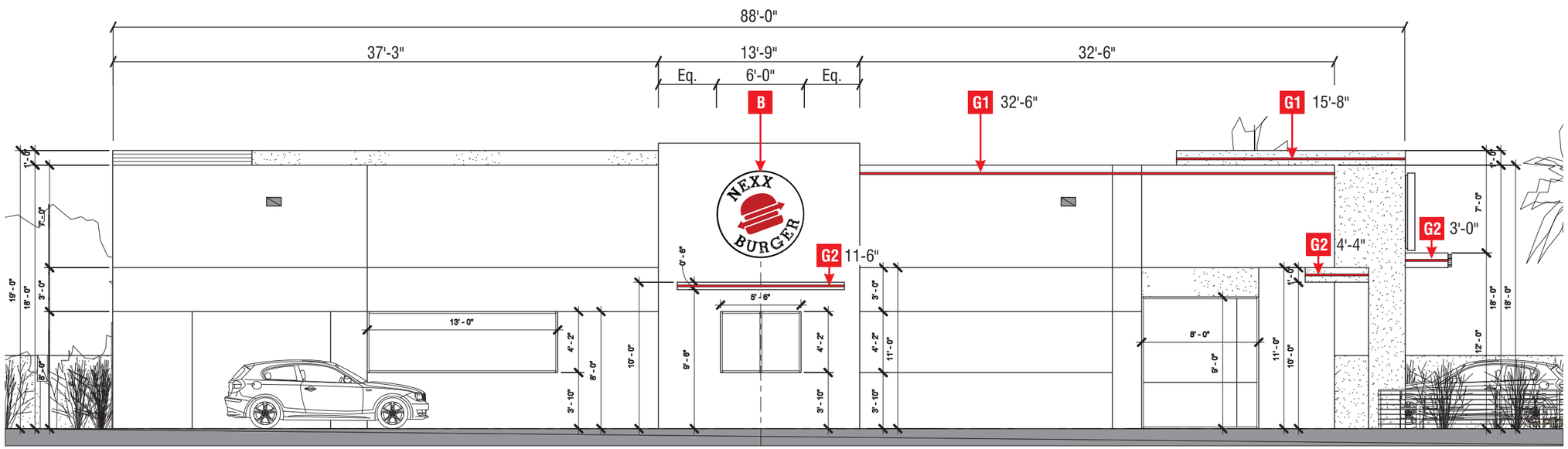

2 **EAST ELEVATION**
SCALE: 1/8" = 1'-0"

G1 TOTAL LENGTH: 48'-3" G2 TOTAL LENGTH: 18'-10"

superior electrical advertising
1700 West Anaheim Street
Long Beach, California
90813-1195
Phone: 562.495.3808
Facsimile: 562.435.1867
www.superiorsigns.com

Project:
Nexx Burger

Address:
2940 E. Chapman Ave.
Orange, CA

Account Manager:
Stan Janocha

Scale: **AS NOTED** — T.A.: **3.50**

Design No.:
19-11-6189-08

Reg. No.:

Revision History:
R0 11/19/19 CV New Drawing
R1 12/27/19 CV Revised per email
R2 3/4/20 mdm (1.5) add new site plan and elevations
R3 3/13/20 mdm (1.0) change pole sign, reposition menu.
R4 7/2/20 CV (1.0) changes made per emails.
R5 7/8/20 LR (1.25) New site plan
R6 10/13/20 mdm (1.25) New site plan,
R7 1/20/21 LR (2) Del G1 from tower and decrease logo on directional
R8 2/16/21 mdm (1.25) New site plan

ELECTRIC SIGN

This sign is intended to be installed in accordance with the requirements of Article 600 of the National Electrical Code and/or other applicable local codes. This includes proper grounding and bonding of the sign.

• CONSTRUCTION APPROVALS •
Acct. Mgr: Date:
Design: Date:
Mfg/QC: Date:

This is an original unpublished drawing created by Superior Electrical Advertising, Inc. It is submitted for your approval. It is not to be shown to anyone outside of your organization, nor is it to be reproduced, copied or exhibited in any fashion. The changing of colors, sizes, materials or illumination method does not alter the design. Ownership of this design is held by Superior Electrical Advertising, Inc. Authorization to use this design in any fashion must be obtained in writing from Superior Electrical Advertising, Inc.
© SEA 2019

Note: The colors depicted here are a graphic representation. Actual colors may vary. See color specifications.

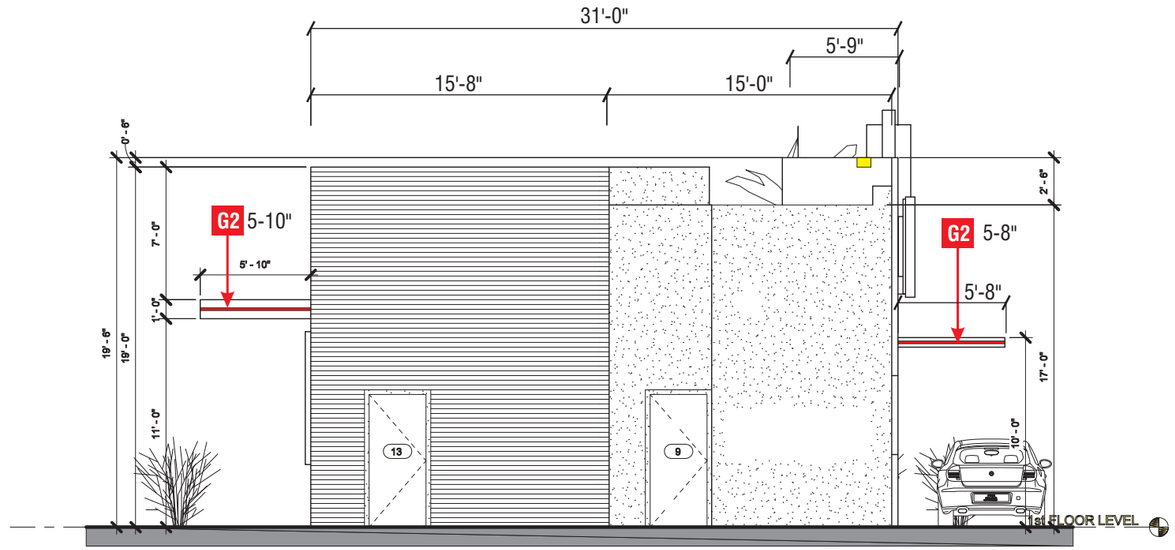

G2 TOTAL LENGTH: 11'-6"

3 SOUTH ELEVATION

SCALE: 1/8" = 1'-0"

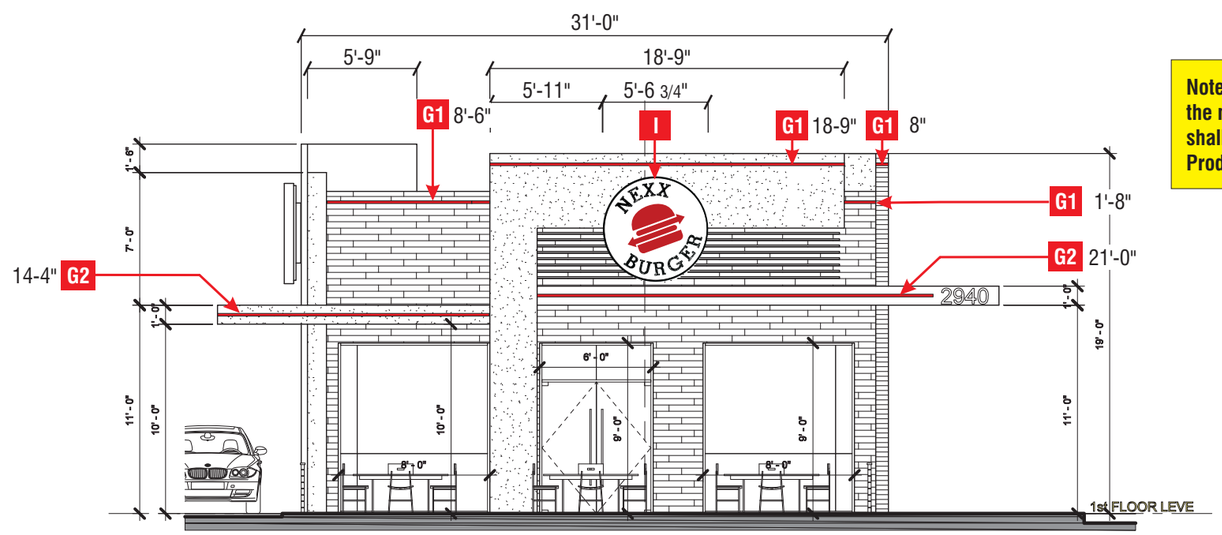

G1 TOTAL LENGTH: 29'-7" G2 TOTAL LENGTH: 35'-4"

4 NORTH ELEVATION

SCALE: 1/8" = 1'-0"

Note: LED bars (G1 and G2) may remain on the north elevation; however the lighting intensity shall not exceed one-half foot candle at the property line. Product is dimmable.

superior electrical advertising

1700 West Anaheim Street
Long Beach, California
90813-1195
Phone: 562.495.3808
Facsimile: 562.435.1867

www.superiorsigns.com

Project:
Nexx Burger

Address:
2940 E. Chapman Ave.
Orange, CA

Account Manager:
Stan Janocha

Scale: **AS NOTED**
T.A.: **3.50**

Design No.:
19-11-6189-08

Reg. No.:

Revision History:
R0 11/19/19 CV New Drawing
R1 12/27/19 CV Revised per email
R2 3/4/20 mdm (1.5) add new site plan and elevations
R3 3/13/20 mdm (1.0) change pole sign, reposition menu.
R4 7/2/20 CV (1.0) changes made per emails.
R5 7/8/20 LR (1.25) New site plan
R6 10/13/20 mdm (1.25) New site plan,
R7 1/20/21 LR (2) Del G1 from tower and decrease logo on directional
R8 2/16/21 mdm (1.25) New site plan

ELECTRIC SIGN

This sign is intended to be installed in accordance with the requirements of Article 600 of the National Electrical Code and/or other applicable local codes. This includes proper grounding and bonding of the sign.

• CONSTRUCTION APPROVALS •

Acct. Mgr: Date:

Design: Date:

Mfg/QC: Date:

This is an original unpublished drawing created by Superior Electrical Advertising, Inc. It is submitted for your approval. It is not to be shown to anyone outside of your organization, nor is it to be reproduced, copied or exhibited in any fashion. The changing of colors, sizes, materials or illumination method does not alter the design. Ownership of this design is held by Superior Electrical Advertising, Inc. Authorization to use this design in any fashion must be obtained in writing from Superior Electrical Advertising, Inc.

© SEA 2019

Note: The colors depicted here are a graphic representation. Actual colors may vary. See color specifications.

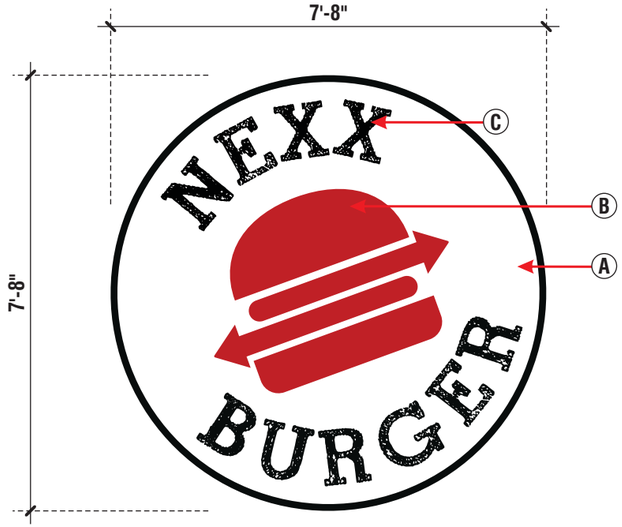

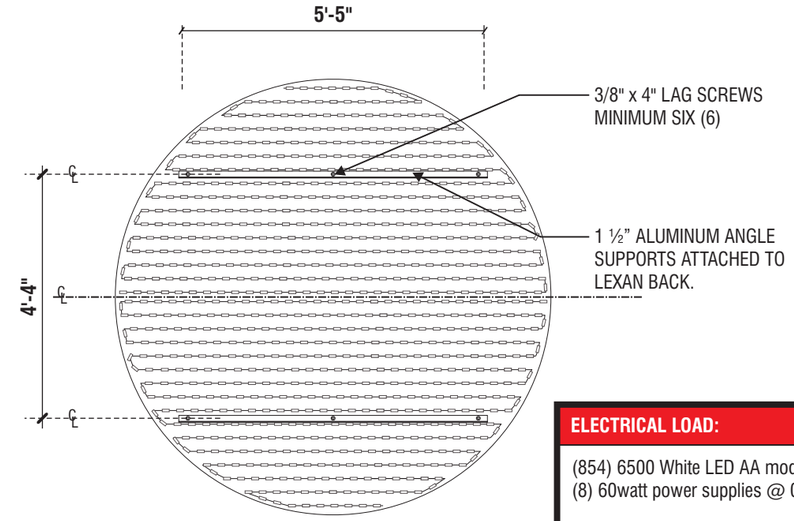

ELECTRICAL LOAD:

(854) 6500 White LED AA modules at 0.5 watts each
(8) 60watt power supplies @ 0.8 amps each.

Total electrical load of sign is 6.4 amps at 120 volt.

A CUSTOM FABRICATED ALUMINUM DUAL ILLUMINATED SINGLE FACE CHANNEL LOGO 58.78 SQ. FT.

QUANTITY: ONE (1) SET REQUIRED SCALE: 3/8" = 1'-0"

2 SIDE VIEW

SCALE: 3/8" = 1'-0"

SPECIFICATIONS:

LOGO	CUSTOM FABRICATED DUAL ILLUMINATED CHANNEL LOGO W/ HALO COPY
FACES:	.125" ALUMINUM
LOGO & COPY:	1/2" CLEAR ACRYLIC ROUTED TO 1/4" PUSH THRU WITH FIRST SURFACE VINYL (DIGITAL PRINT BLACK ON WHITE VINYL & CARDINAL RED) WITH SECOND SURFACE DIFFUSER
BACKS:	CLEAR LEXAN BACK
RETURNS:	5" DEEP .063" ALUMINUM BLACK RETURNS
STANDOFF:	1 ½" ALUMINUM STANDOFFS PAINTED WHITE
ILLUMINATION:	WHITE LED MODULES WITH SELF CONTAINED POWER SUPPLIES
NOTE:	FIELD MEASUREMENT REQUIRED

PLEASE REFER TO THE NUMBERED ITEMS BELOW FOR INCORPORATED INSTALL INSTRUCTIONS. LISTED INSTRUCTIONS TO BE FOUND WITH ACTUAL SIGNAGE (NUMBERED ITEMS CORRESPOND TO SECTION DETAIL)

ITEM #	DESCRIPTION
1	.125" ALUMINUM FACE
2	DISCONNECT SWITCH
3	THREADED NIPPLE AND COUPLING (FLEX CONNECTOR)
4	POWER SUPPLY
5	HALO LIT PUSH THRU LETTERS

COLOR SCHEDULE

A	BEHR PR-W15 PURE WHITE
B	3M 3630-53 CARDINAL RED VINYL
C	PRINTED BLACK, BLACK PAINTED RETURNS

Note to All Contractors

120 Sign Voltage

This sign is intended to be installed in accordance with the requirements of Article 600 of the National Electrical Code and/or other applicable local codes. This includes proper grounding and bonding of the sign. All wall penetrations to be sealed with UL Listed silicone sealant.

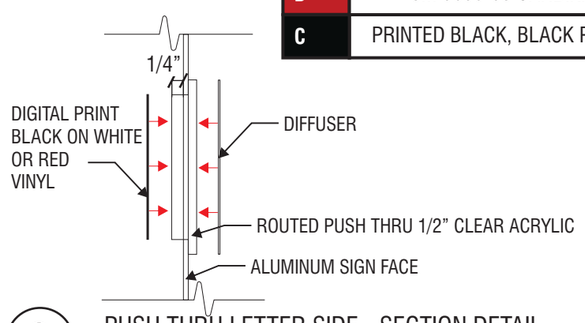

3 PUSH THRU LETTER SIDE - SECTION DETAIL
NOT TO SCALE

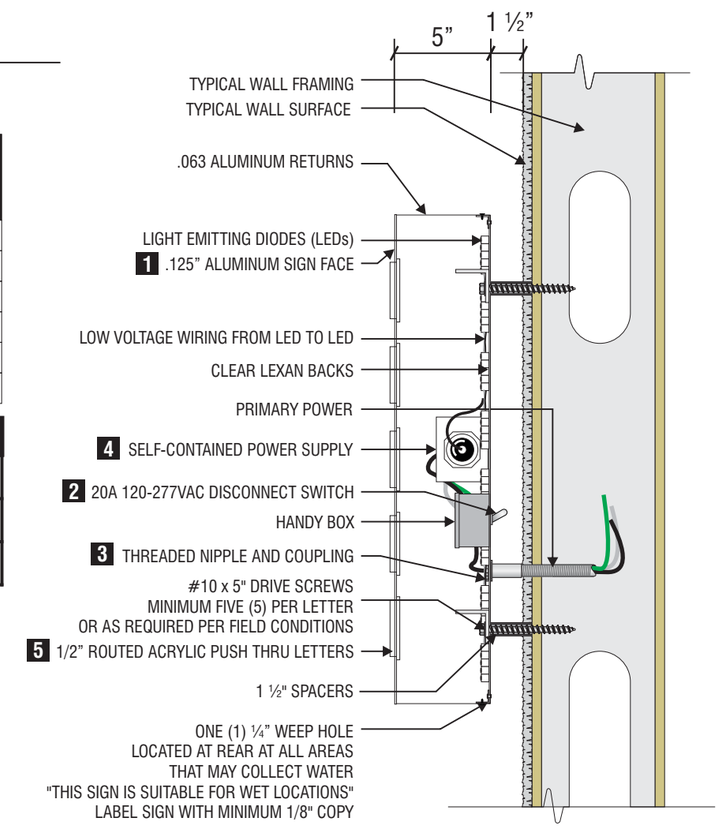

1 TYPICAL SECTION DETAIL
SCALE: NTS

superior electrical advertising
1700 West Anaheim Street
Long Beach, California
90813-1195
Phone: 562.495.3808
Facsimile: 562.435.1867
www.superiorsigns.com

Project:
Nexx Burger

Address:
2940 E. Chapman Ave.
Orange, CA

Account Manager:
Stan Janocha

Scale: **AS NOTED** T.A.: **3.50**

Design No.:
19-11-6189-08

Reg. No.:

Revision History:
R0 11/19/19 CV New Drawing
R1 12/27/19 CV Revised per email
R2 3/4/20 mdm (1.5) add new site plan and elevations
R3 3/13/20 mdm (1.0) change pole sign, reposition menu.
R4 7/2/20 CV (1.0) changes made per emails.
R5 7/8/20 LR (1.25) New site plan
R6 10/13/20 mdm (1.25) New site plan,
R7 1/20/21 LR (2) Del G1 from tower and decrease logo on directional
R8 2/16/21 mdm (1.25) New site plan

ELECTRIC SIGN

This sign is intended to be installed in accordance with the requirements of Article 600 of the National Electrical Code and/or other applicable local codes. This includes proper grounding and bonding of the sign.

• CONSTRUCTION APPROVALS •

Acct. Mgr: Date:

Design: Date:

Mfg/QC: Date:

This is an original unpublished drawing created by Superior Electrical Advertising, Inc. It is submitted for your approval. It is not to be shown to anyone outside of your organization, nor is it to be reproduced, copied or exhibited in any fashion. The changing of colors, sizes, materials or illumination method does not alter the design. Ownership of this design is held by Superior Electrical Advertising, Inc. Authorization to use this design in any fashion must be obtained in writing from Superior Electrical Advertising, Inc.

© SEA 2019

Note: The colors depicted here are a graphic representation. Actual colors may vary. See color specifications.

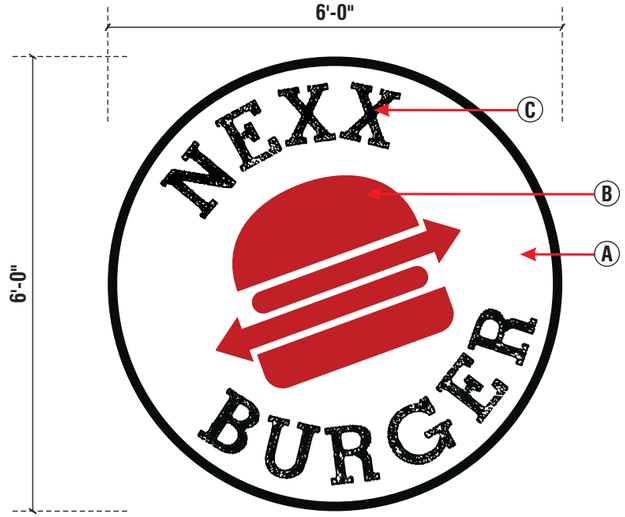

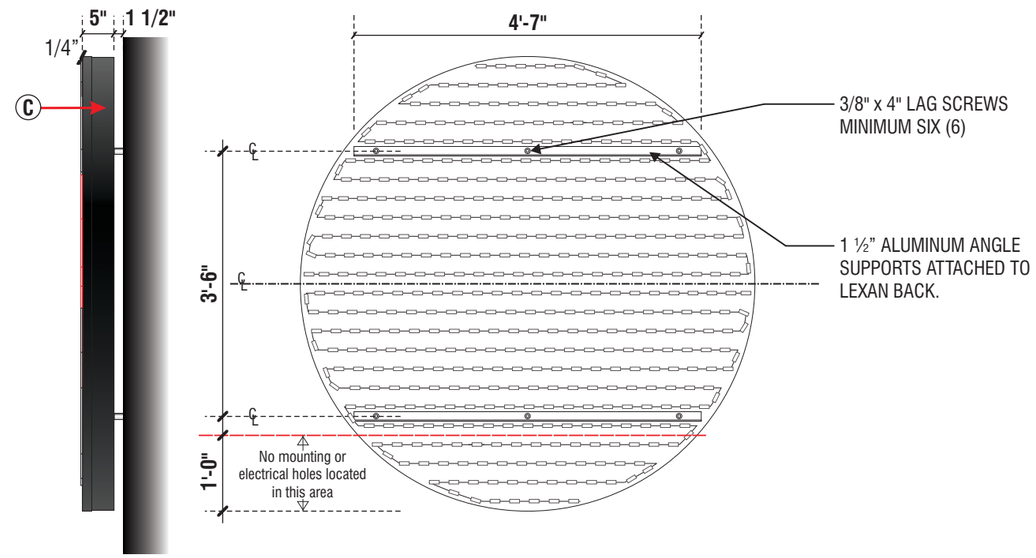

B CUSTOM FABRICATED ALUMINUM DUAL ILLUMINATED SINGLE FACE CHANNEL LOGO 36.00 SQ. FT.

QUANTITY: ONE (1) REQUIRED SCALE: ½" = 1'-0"

2 SIDE VIEW

SCALE: ½" = 1'-0"

SPECIFICATIONS:

LOGO FACES:	CUSTOM FABRICATED DUAL ILLUMINATED CHANNEL LOGO W/ HALO COPY .125" ALUMINUM
LOGO & COPY:	1/2" CLEAR ACRYLIC ROUTED TO 1/4" PUSH THRU WITH FIRST SURFACE VINYL (DIGITAL PRINT BLACK ON WHITE VINYL & CARDINAL RED) WITH SECOND SURFACE DIFFUSER
BACKS:	CLEAR LEXAN BACK
RETURNS:	5" DEEP .063" ALUMINUM BLACK RETURNS
STANDOFF:	1 ½" ALUMINUM STANDOFFS PAINTED WHITE
ILLUMINATION:	WHITE LED MODULES WITH SELF CONTAINED POWER SUPPLIES
NOTE:	FIELD MEASUREMENT REQUIRED

PLEASE REFER TO THE NUMBERED ITEMS BELOW FOR INCORPORATED INSTALL INSTRUCTIONS. LISTED INSTRUCTIONS TO BE FOUND WITH ACTUAL SIGNAGE (NUMBERED ITEMS CORRESPOND TO SECTION DETAIL)

ITEM #	DESCRIPTION
1	.125" ALUMINUM FACE
2	DISCONNECT SWITCH
3	THREADED NIPPLE AND COUPLING (FLEX CONNECTOR)
4	POWER SUPPLY
5	HALO LIT PUSH THRU LETTERS

COLOR SCHEDULE	
A	BEHR PR-W15 PURE WHITE
B	3M 3630-53 CARDINAL RED VINYL
C	DIGITAL PRINT, BLACK PAINTED RETURNS

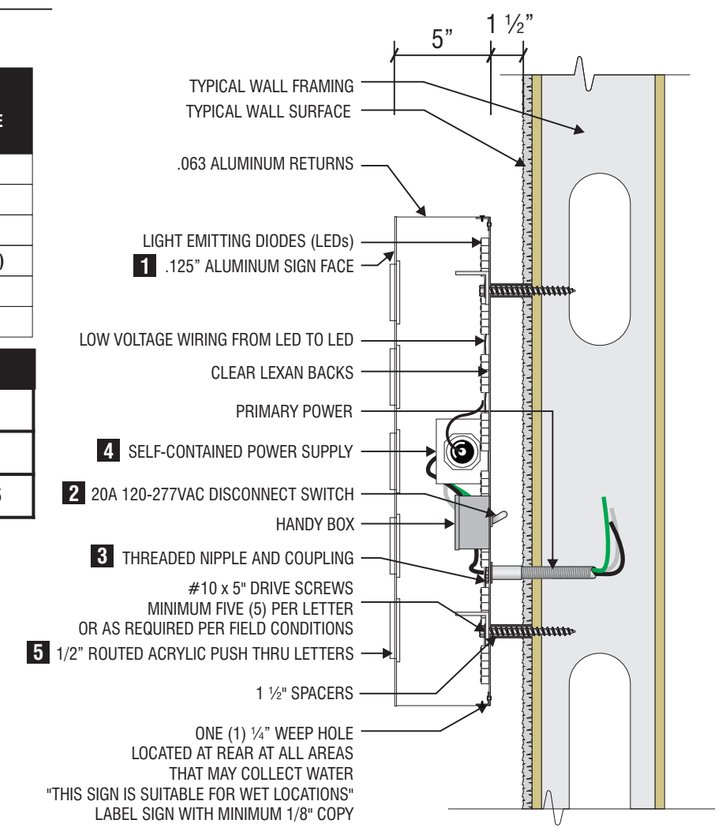

1 TYPICAL SECTION DETAIL

SCALE: NTS

Note to All Contractors

120 Sign Voltage

This sign is intended to be installed in accordance with the requirements of Article 600 of the National Electrical Code and/or other applicable local codes. This includes proper grounding and bonding of the sign.
All wall penetrations to be sealed with UL Listed silicone sealant.

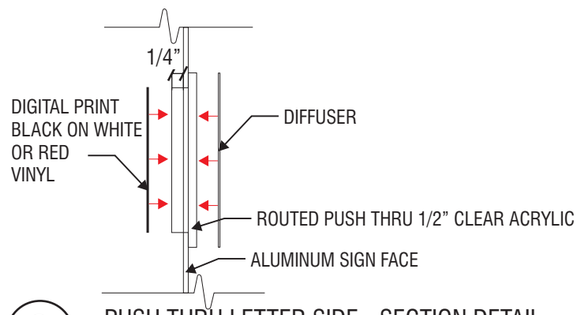

3 PUSH THRU LETTER SIDE - SECTION DETAIL

NOT TO SCALE

superior electrical advertising
1700 West Anaheim Street
Long Beach, California
90813-1195
Phone: 562.495.3808
Facsimile: 562.435.1867
www.superiorsigns.com

Project:
Nexx Burger

Address:
2940 E. Chapman Ave.
Orange, CA

Account Manager:
Stan Janocha

Scale: **AS NOTED** T.A.: **3.50**

Design No.:
19-11-6189-08

Reg. No.:

Revision History:
R0 11/19/19 CV New Drawing
R1 12/27/19 CV Revised per email
R2 3/4/20 mdm (1.5) add new site plan and elevations
R3 3/13/20 mdm (1.0) change pole sign, reposition menu.
R4 7/2/20 CV (1.0) changes made per emails.
R5 7/8/20 LR (1.25) New site plan
R6 10/13/20 mdm (1.25) New site plan,
R7 1/20/21 LR (2) Del G1 from tower and decrease logo on directional
R8 2/16/21 mdm (1.25) New site plan

ELECTRIC SIGN

This sign is intended to be installed in accordance with the requirements of Article 600 of the National Electrical Code and/or other applicable local codes. This includes proper grounding and bonding of the sign.

• CONSTRUCTION APPROVALS •

Acct. Mgr: Date:

Design: Date:

Mfg/QC: Date:

This is an original unpublished drawing created by Superior Electrical Advertising, Inc. It is submitted for your approval. It is not to be shown to anyone outside of your organization, nor is it to be reproduced, copied or exhibited in any fashion. The changing of colors, sizes, materials or illumination method does not alter the design. Ownership of this design is held by Superior Electrical Advertising, Inc. Authorization to use this design in any fashion must be obtained in writing from Superior Electrical Advertising, Inc.

© SEA 2019

Note: The colors depicted here are a graphic representation. Actual colors may vary. See color specifications.

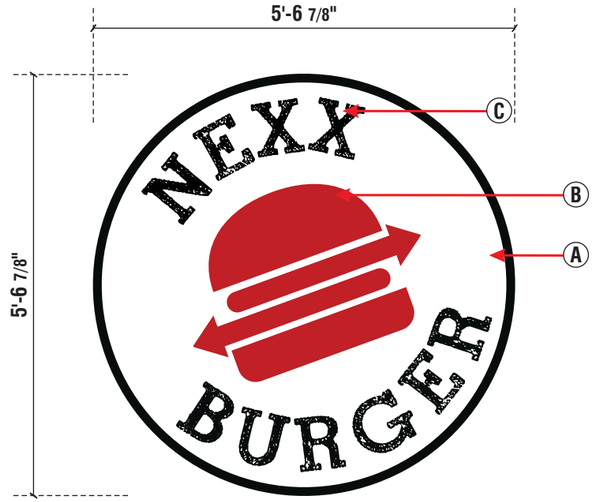

1 CUSTOM FABRICATED ALUMINUM DUAL ILLUMINATED SINGLE FACE CHANNEL LOGO — 31.00 SQ. FT.
QUANTITY: ONE (1) REQUIRED — SCALE: ½" = 1'-0"

2 SIDE VIEW
SCALE: ½" = 1'-0"

SPECIFICATIONS:

LOGO FACES:	CUSTOM FABRICATED DUAL ILLUMINATED CHANNEL LOGO W/ HALO COPY .125" ALUMINUM
LOGO & COPY:	1/2" CLEAR ACRYLIC ROUTED TO 1/4" PUSH THRU WITH FIRST SURFACE VINYL (DIGITAL PRINT BLACK ON WHITE VINYL & CARDINAL RED) WITH SECOND SURFACE DIFFUSER
BACKS:	CLEAR LEXAN BACK
RETURNS:	5" DEEP .063" ALUMINUM BLACK RETURNS
STANDOFF:	1 ½" ALUMINUM STANDOFFS PAINTED WHITE
ILLUMINATION:	WHITE LED MODULES WITH SELF CONTAINED POWER SUPPLIES
NOTE:	FIELD MEASUREMENT REQUIRED

PLEASE REFER TO THE NUMBERED ITEMS BELOW FOR INCORPORATED INSTALL INSTRUCTIONS. LISTED INSTRUCTIONS TO BE FOUND WITH ACTUAL SIGNAGE (NUMBERED ITEMS CORRESPOND TO SECTION DETAIL)

ITEM #	DESCRIPTION
1	.125" ALUMINUM FACE
2	DISCONNECT SWITCH
3	THREADED NIPPLE AND COUPLING (FLEX CONNECTOR)
4	POWER SUPPLY
5	HALO LIT PUSH THRU LETTERS

COLOR SCHEDULE	
A	BEHR PR-W15 PURE WHITE
B	3M 3630-53 CARDINAL RED VINYL
C	DIGITAL PRINT, BLACK PAINTED RETURNS

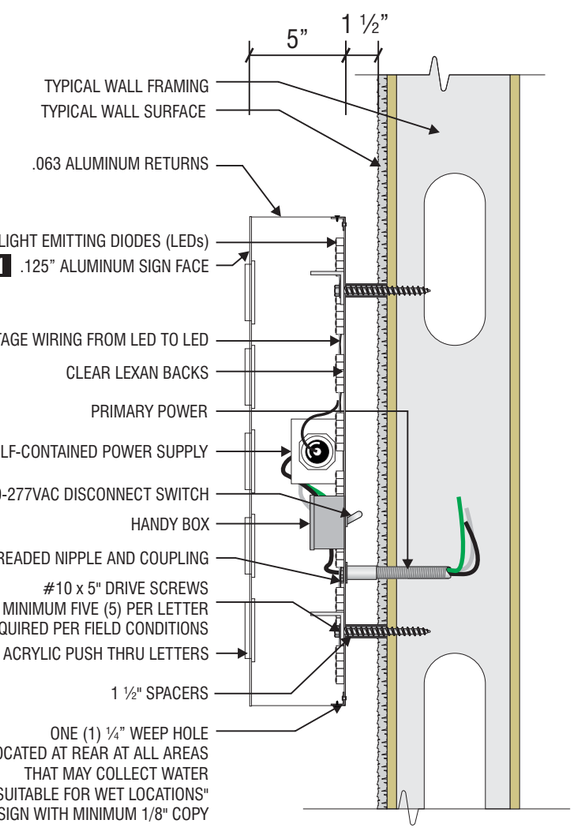

Note to All Contractors

120 Sign Voltage

This sign is intended to be installed in accordance with the requirements of Article 600 of the National Electrical Code and/or other applicable local codes. This includes proper grounding and bonding of the sign.
All wall penetrations to be sealed with UL Listed silicone sealant.

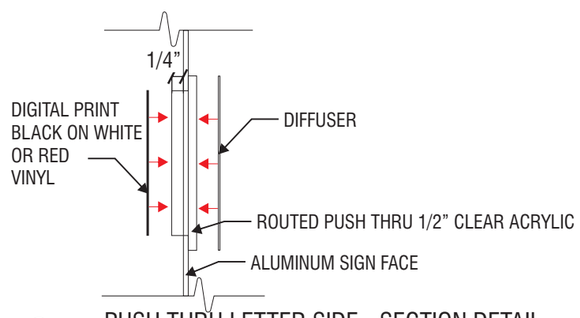

3 PUSH THRU LETTER SIDE - SECTION DETAIL
NOT TO SCALE

superior electrical advertising
1700 West Anaheim Street
Long Beach, California
90813-1195
Phone: 562.495.3808
Facsimile: 562.435.1867
www.superiorsigns.com

Project:
Nexx Burger

Address:
2940 E. Chapman Ave.
Orange, CA

Account Manager:
Stan Janocha

Scale: **AS NOTED** — T.A.: **3.50**

Design No.:
19-11-6189-08

Reg. No.:

Revision History:
R0 11/19/19 CV New Drawing
R1 12/27/19 CV Revised per email
R2 3/4/20 mdm (1.5) add new site plan and elevations
R3 3/13/20 mdm (1.0) change pole sign, reposition menu.
R4 7/2/20 CV (1.0) changes made per emails.
R5 7/8/20 LR (1.25) New site plan
R6 10/13/20 mdm (1.25) New site plan,
R7 1/20/21 LR (2) Del G1 from tower and decrease logo on directional
R8 2/16/21 mdm (1.25) New site plan

ELECTRIC SIGN

This sign is intended to be installed in accordance with the requirements of Article 600 of the National Electrical Code and/or other applicable local codes. This includes proper grounding and bonding of the sign.

• CONSTRUCTION APPROVALS •
Acct. Mgr: Date:
Design: Date:
Mfg/QC: Date:

This is an original unpublished drawing created by Superior Electrical Advertising, Inc. It is submitted for your approval. It is not to be shown to anyone outside of your organization, nor is it to be reproduced, copied or exhibited in any fashion. The changing of colors, sizes, materials or illumination method does not alter the design. Ownership of this design is held by Superior Electrical Advertising, Inc. Authorization to use this design in any fashion must be obtained in writing from Superior Electrical Advertising, Inc.
© SEA 2019

Note: The colors depicted here are a graphic representation. Actual colors may vary. See color specifications.

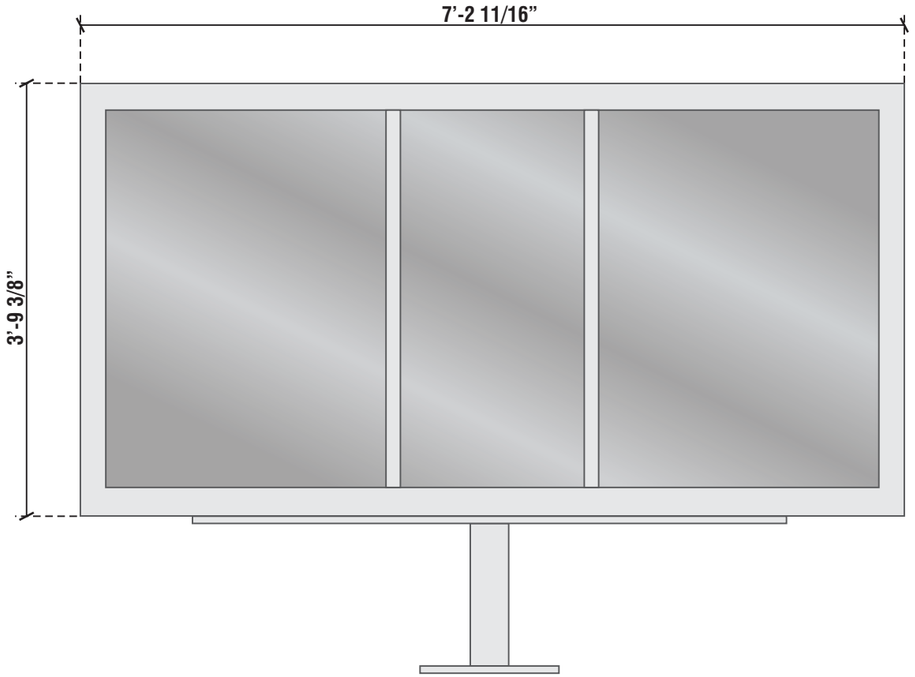

C.1 MENU BOARD SIGN / ILLUMINATED S/F DIGITAL 3-PANEL MENU BOARD DISPLAY

C.2 QUANTITY: TWO (2) REQUIRED - PRE-MENU AND MENU BOARDS

SCALE: 3/4" = 1'-0"

MAX 32.0 SQ. FT. ALLOWED

NOTE: FIELD MEASURMENT REQUIRED

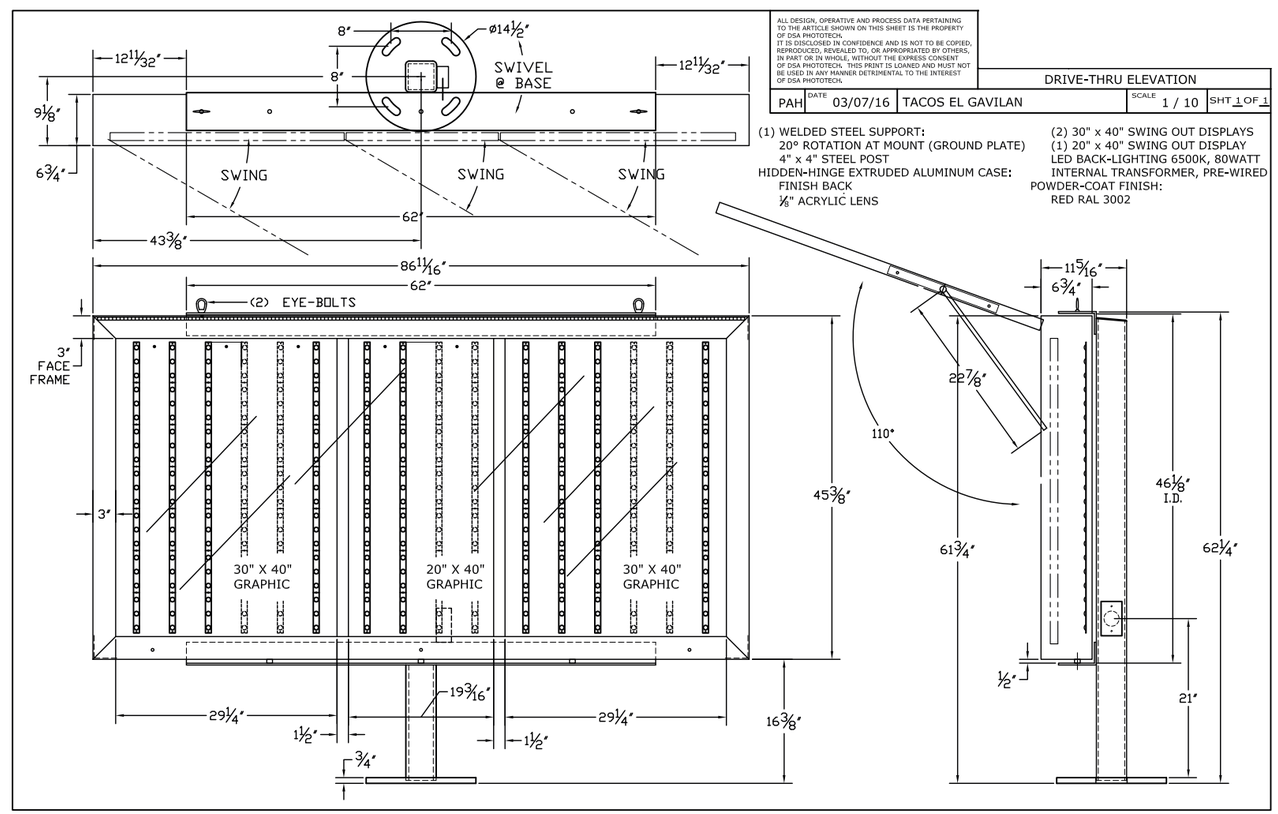

ALL DESIGN, OPERATIVE AND PROCESS DATA PERTAINING TO THE ARTICLE SHOWN ON THIS SHEET IS THE PROPERTY OF DSA PHOTOTECH.
IT IS DISCLOSED IN CONFIDENCE AND IS NOT TO BE COPIED, REPRODUCED, REVEALED TO, OR APPROPRIATED BY OTHERS, IN PART OR IN WHOLE, WITHOUT THE EXPRESS CONSENT OF DSA PHOTOTECH. THIS PRINT IS LOANED AND MUST NOT BE USED IN ANY MANNER DETRIMENTAL TO THE INTEREST OF DSA PHOTOTECH.

DRIVE-THRU ELEVATION

PAH	DATE 03/07/16	TACOS EL GAVILAN	SCALE 1 / 10	SHT 1 OF 1

(1) WELDED STEEL SUPPORT:
20° ROTATION AT MOUNT (GROUND PLATE)
4" x 4" STEEL POST
HIDDEN-HINGE EXTRUDED ALUMINUM CASE:
FINISH BACK
⅛" ACRYLIC LENS

(2) 30" x 40" SWING OUT DISPLAYS
(1) 20" x 40" SWING OUT DISPLAY
LED BACK-LIGHTING 6500K, 80WATT
INTERNAL TRANSFORMER, PRE-WIRED
POWDER-COAT FINISH:
RED RAL 3002

superior electrical advertising
1700 West Anaheim Street
Long Beach, California
90813-1195
Phone: 562.495.3808
Facsimile: 562.435.1867
www.superiorsigns.com

Project:
Nexx Burger

Address:
2940 E. Chapman Ave.
Orange, CA

Account Manager:
Stan Janocha

Scale: **AS NOTED** T.A.: **3.50**

Design No.:
19-11-6189-08

Reg. No.:

Revision History:
R0 11/19/19 CV New Drawing
R1 12/27/19 CV Revised per email
R2 3/4/20 mdm (1.5) add new site plan and elevations
R3 3/13/20 mdm (1.0) change pole sign, reposition menu.
R4 7/2/20 CV (1.0) changes made per emails.
R5 7/8/20 LR (1.25) New site plan
R6 10/13/20 mdm (1.25) New site plan,
R7 1/20/21 LR (2) Del G1 from tower and decrease logo on directional
R8 2/16/21 mdm (1.25) New site plan

ELECTRIC SIGN

This sign is intended to be installed in accordance with the requirements of Article 600 of the National Electrical Code and/or other applicable local codes. This includes proper grounding and bonding of the sign.

• CONSTRUCTION APPROVALS •

Acct. Mgr: Date:

Design: Date:

Mfg/QC: Date:

This is an original unpublished drawing created by Superior Electrical Advertising, Inc. It is submitted for your approval. It is not to be shown to anyone outside of your organization, nor is it to be reproduced, copied or exhibited in any fashion. The changing of colors, sizes, materials or illumination method does not alter the design. Ownership of this design is held by Superior Electrical Advertising, Inc. Authorization to use this design in any fashion must be obtained in writing from Superior Electrical Advertising, Inc.

© SEA 2019

Note: The colors depicted here are a graphic representation. Actual colors may vary. See color specifications.

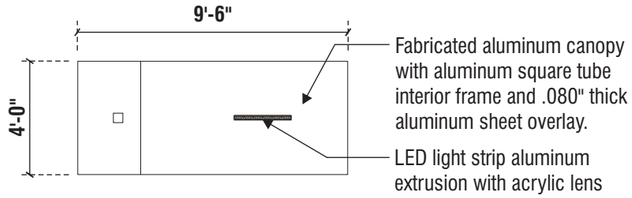

3 BOTTOM VIEW OF CANOPY

SCALE: 3/16" = 1'-0"

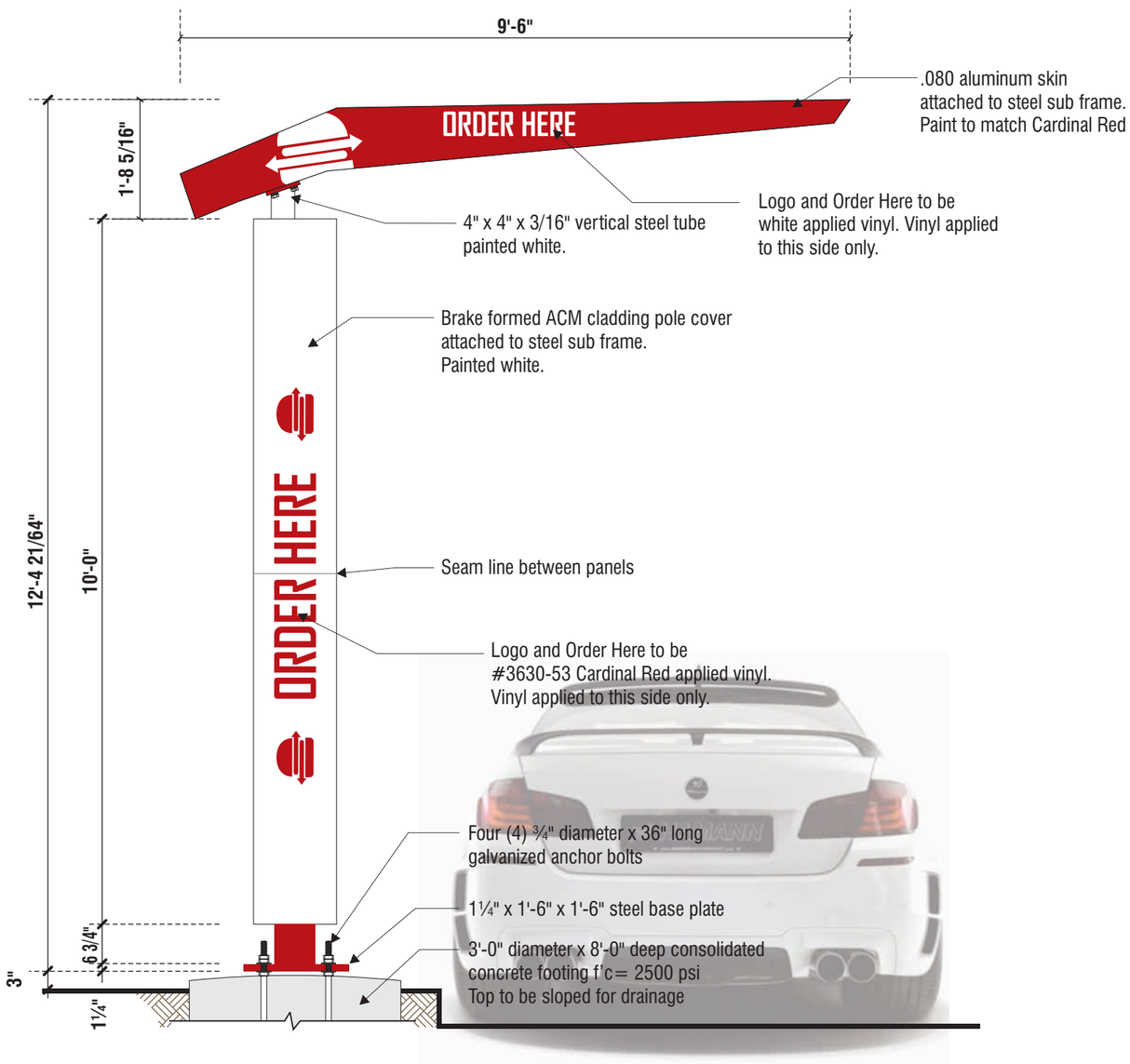

D CUSTOM FABRICATED ALUMINUM SKINNY SPRING BOARD COD CANOPY

QUANTITY: ONE (1) REQUIRED

SCALE: ½" = 1'-0"

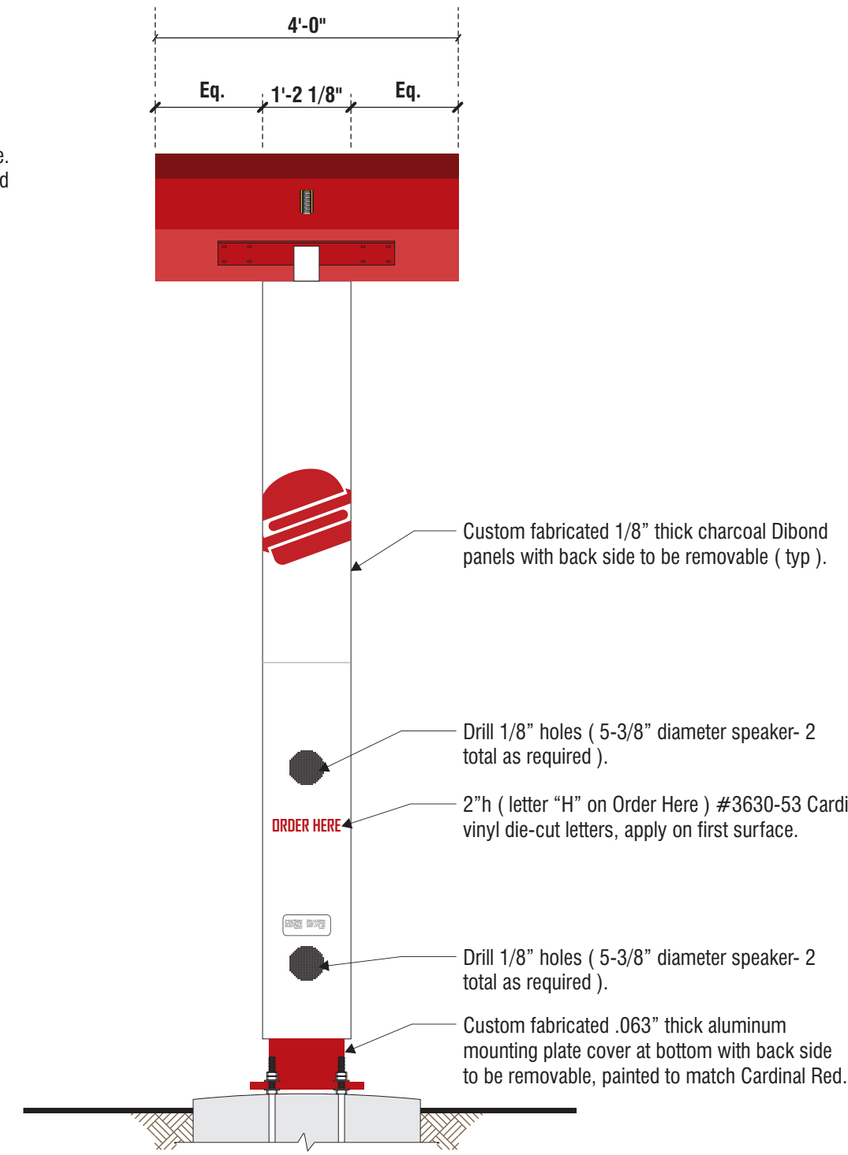

1 FRONT VIEW - COD CANOPY

SCALE: ½" = 1'-0"

superior electrical advertising

1700 West Anaheim Street
Long Beach, California
90813-1195
Phone: 562.495.3808
Facsimile: 562.435.1867

www.superiorsigns.com

Project:
Nexx Burger

Address:
2940 E. Chapman Ave.
Orange, CA

Account Manager:
Stan Janocha

Scale: **AS NOTED** T.A.: **3.50**

Design No.:
19-11-6189-08

Reg. No.:

Revision History:
R0 11/19/19 CV New Drawing
R1 12/27/19 CV Revised per email
R2 3/4/20 mdm (1.5) add new site plan and elevations
R3 3/13/20 mdm (1.0) change pole sign, reposition menu.
R4 7/2/20 CV (1.0) changes made per emails.
R5 7/8/20 LR (1.25) New site plan
R6 10/13/20 mdm (1.25) New site plan,
R7 1/20/21 LR (2) Del G1 from tower and decrease logo on directional
R8 2/16/21 mdm (1.25) New site plan

ELECTRIC SIGN

This sign is intended to be installed in accordance with the requirements of Article 600 of the National Electrical Code and/or other applicable local codes. This includes proper grounding and bonding of the sign.

• CONSTRUCTION APPROVALS •

Acct. Mgr: Date:

Design: Date:

Mfg/QC: Date:

This is an original unpublished drawing created by Superior Electrical Advertising, Inc. It is submitted for your approval. It is not to be shown to anyone outside of your organization, nor is it to be reproduced, copied or exhibited in any fashion. The changing of colors, sizes, materials or illumination method does not alter the design. Ownership of this design is held by Superior Electrical Advertising, Inc. Authorization to use this design in any fashion must be obtained in writing from Superior Electrical Advertising, Inc.

© SEA 2019

Note: The colors depicted here are a graphic representation. Actual colors may vary. See color specifications.

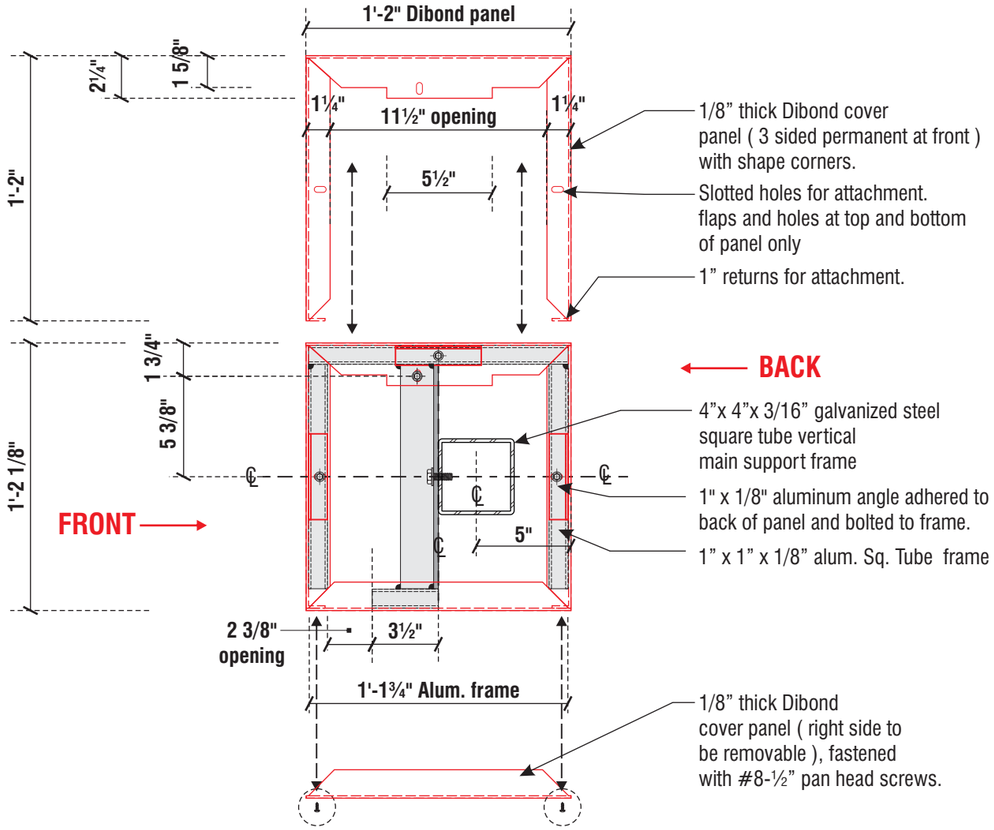

1 TYP. "DIBOND" PANEL ATTACHMENT DETAIL (PLAN VIEW)

SCALE: 1½"= 1'-0"

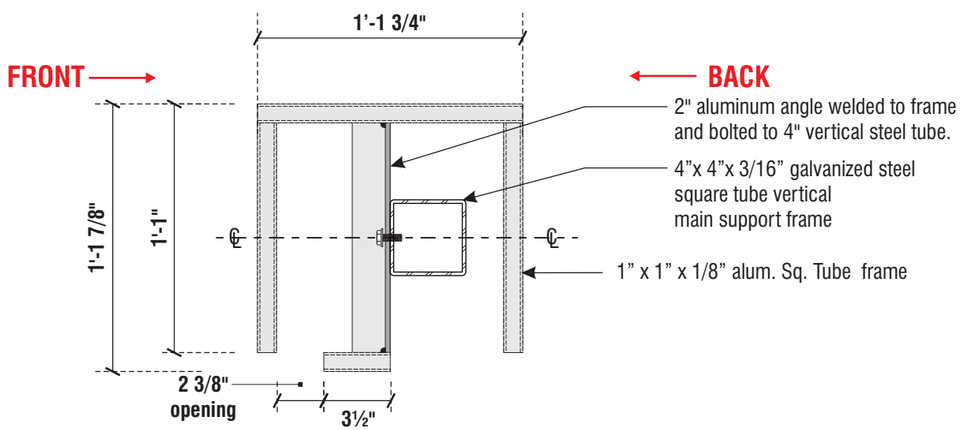

2 TYPICAL FRAME (PLAN VIEW)

SCALE: 1½"= 1'-0"

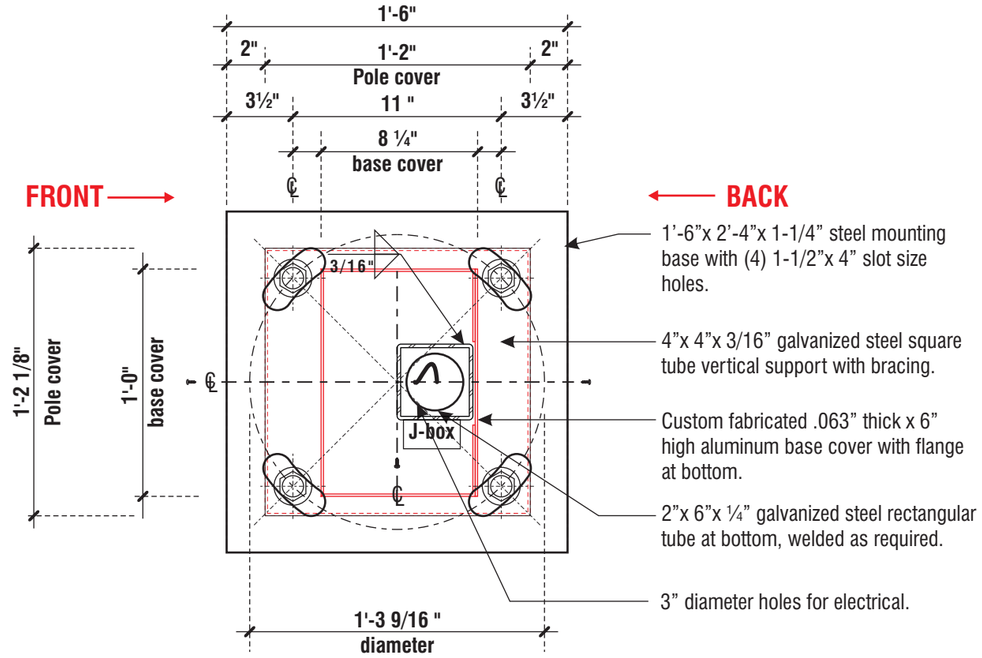

1 MOUNTING BASE PLATE DETAIL (PLAN VIEW)

SCALE: 1½"= 1'-0"

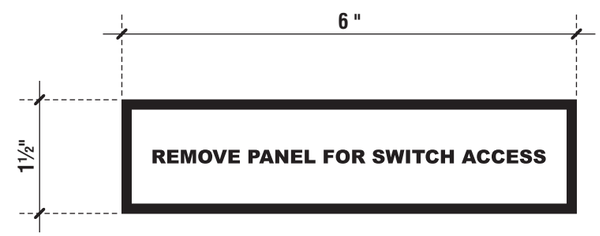

White opaque vinyl background with black copy & border. Applied on first surface.

2 STICKER ABOVE RIGHT SIDE REMOVABLE PANEL

SCALE: Half size

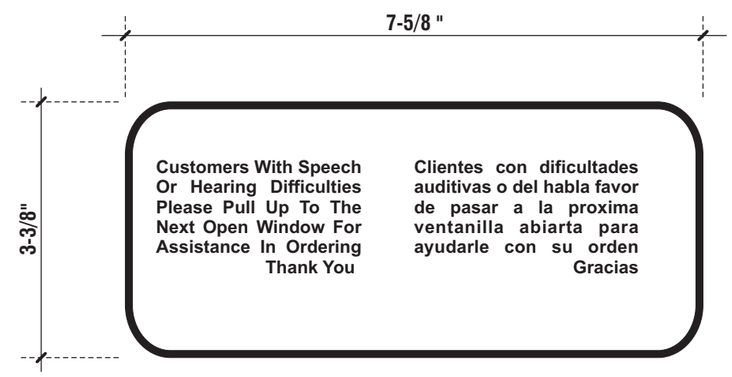

Clear vinyl with black digital printed copy and border. Applied on first surface.

3 CLEAR VINYL W/ BLACK DIGITAL COPY AND BORDER BELOW PLASTIC LEN AT FRONT PANEL

SCALE: Half size

superior electrical advertising
1700 West Anaheim Street
Long Beach, California
90813-1195
Phone: 562.495.3808
Facsimile: 562.435.1867
www.superiorsigns.com

Project:
Nexx Burger

Address:
2940 E. Chapman Ave.
Orange, CA

Account Manager:
Stan Janocha

Scale: **AS NOTED** T.A.: **3.50**

Design No.:
19-11-6189-08

Reg. No.:

Revision History:
R0 11/19/19 CV New Drawing
R1 12/27/19 CV Revised per email
R2 3/4/20 mdm (1.5) add new site plan and elevations
R3 3/13/20 mdm (1.0) change pole sign, reposition menu.
R4 7/2/20 CV (1.0) changes made per emails.
R5 7/8/20 LR (1.25) New site plan
R6 10/13/20 mdm (1.25) New site plan,
R7 1/20/21 LR (2) Del G1 from tower and decrease logo on directional
R8 2/16/21 mdm (1.25) New site plan

ELECTRIC SIGN

This sign is intended to be installed in accordance with the requirements of Article 600 of the National Electrical Code and/or other applicable local codes. This includes proper grounding and bonding of the sign.

• CONSTRUCTION APPROVALS •

Acct. Mgr: Date:

Design: Date:

Mfg/QC: Date:

This is an original unpublished drawing created by Superior Electrical Advertising, Inc. It is submitted for your approval. It is not to be shown to anyone outside of your organization, nor is it to be reproduced, copied or exhibited in any fashion. The changing of colors, sizes, materials or illumination method does not alter the design. Ownership of this design is held by Superior Electrical Advertising, Inc. Authorization to use this design in any fashion must be obtained in writing from Superior Electrical Advertising, Inc.

© SEA 2019

Note: The colors depicted here are a graphic representation. Actual colors may vary. See color specifications.

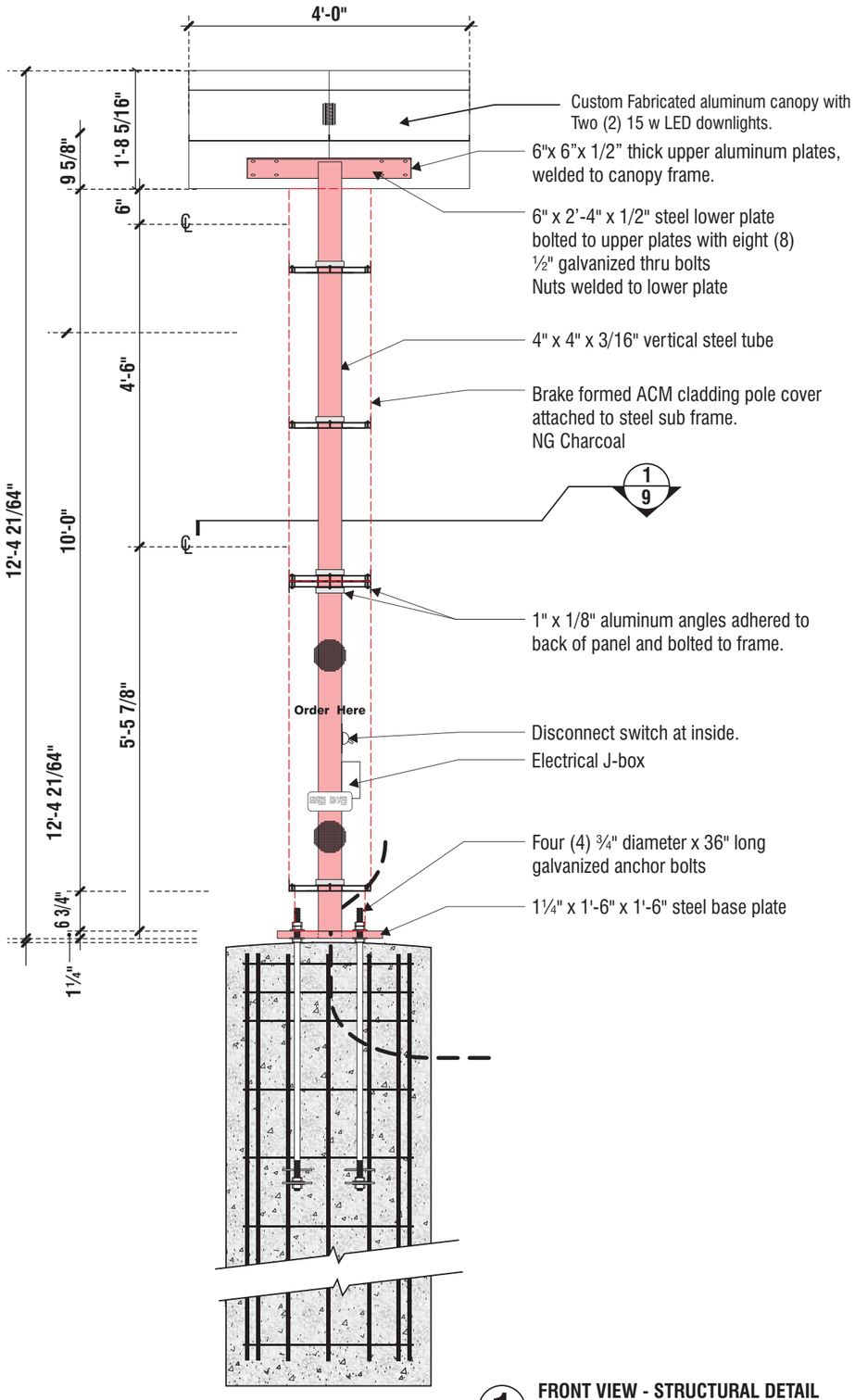

1 FRONT VIEW - STRUCTURAL DETAIL

SCALE: ½" = 1'-0"

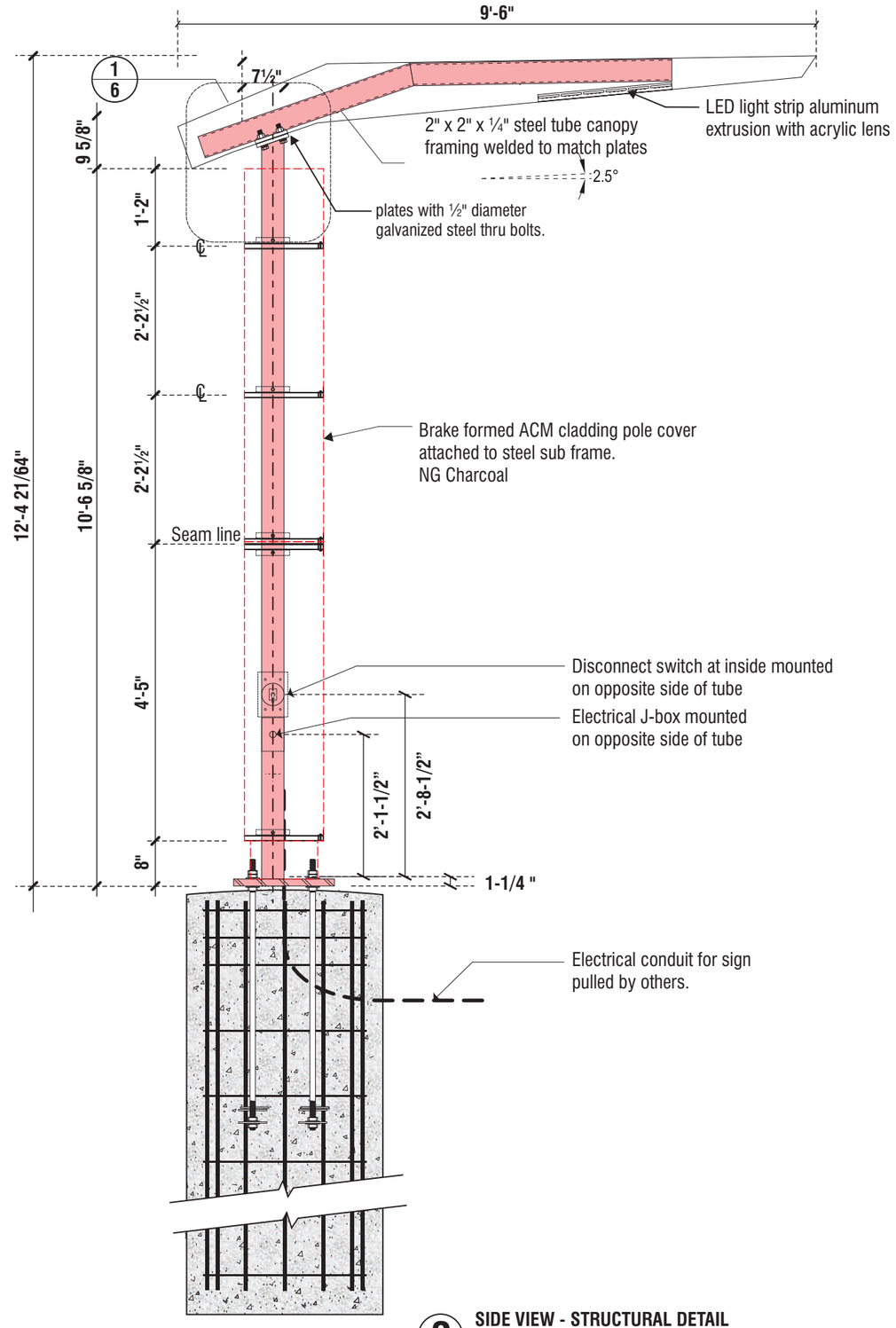

2 SIDE VIEW - STRUCTURAL DETAIL

SCALE: ½" = 1'-0"

superior electrical advertising

1700 West Anaheim Street
Long Beach, California
90813-1195
Phone: 562.495.3808
Facsimile: 562.435.1867

www.superiorsigns.com

Project:
Nexx Burger

Address:
2940 E. Chapman Ave.
Orange, CA

Account Manager:
Stan Janocha

Scale: **AS NOTED** T.A.: **3.50**

Design No.:
19-11-6189-08

Reg. No.:

Revision History:
R0 11/19/19 CV New Drawing
R1 12/27/19 CV Revised per email
R2 3/4/20 mdm (1.5) add new site plan and elevations
R3 3/13/20 mdm (1.0) change pole sign, reposition menu.
R4 7/2/20 CV (1.0) changes made per emails.
R5 7/8/20 LR (1.25) New site plan
R6 10/13/20 mdm (1.25) New site plan,
R7 1/20/21 LR (2) Del G1 from tower and decrease logo on directional
R8 2/16/21 mdm (1.25) New site plan

ELECTRIC SIGN

This sign is intended to be installed in accordance with the requirements of Article 600 of the National Electrical Code and/or other applicable local codes. This includes proper grounding and bonding of the sign.

• CONSTRUCTION APPROVALS •

Acct. Mgr: Date:

Design: Date:

Mfg/QC: Date:

This is an original unpublished drawing created by Superior Electrical Advertising, Inc. It is submitted for your approval. It is not to be shown to anyone outside of your organization, nor is it to be reproduced, copied or exhibited in any fashion. The changing of colors, sizes, materials or illumination method does not alter the design. Ownership of this design is held by Superior Electrical Advertising, Inc. Authorization to use this design in any fashion must be obtained in writing from Superior Electrical Advertising, Inc.

© SEA 2019

Note: The colors depicted here are a graphic representation. Actual colors may vary. See color specifications.

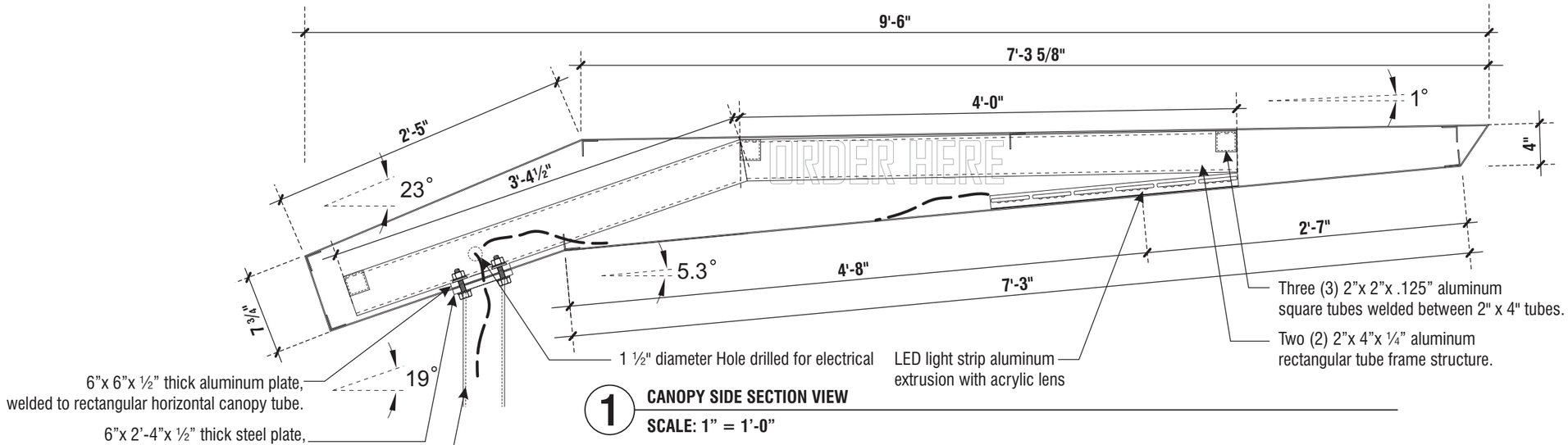

1 CANOPY SIDE SECTION VIEW

SCALE: 1" = 1'-0"

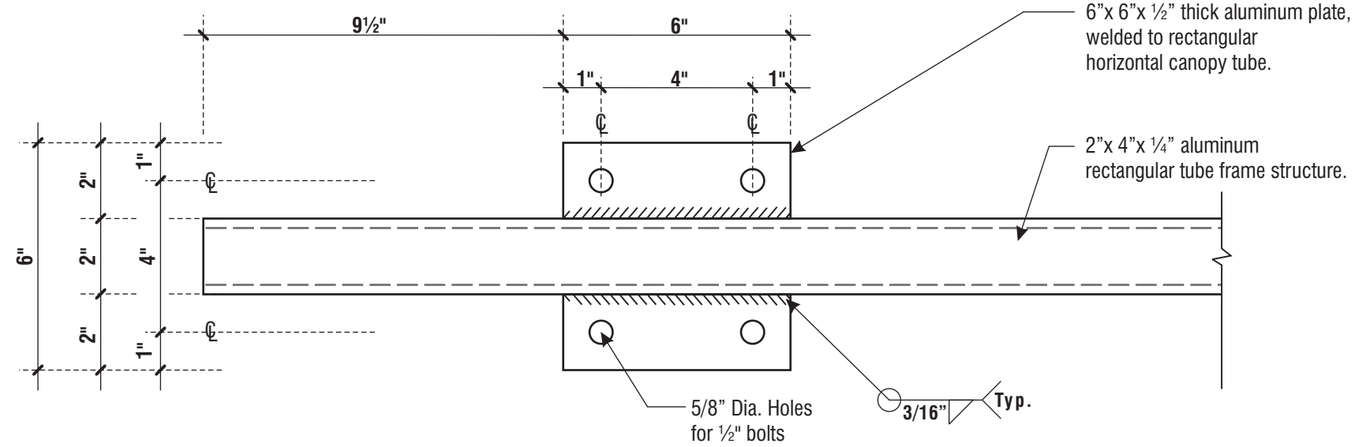

2 UPPER PLATE INSIDE CANOPY

SCALE: 3" = 1'-0"

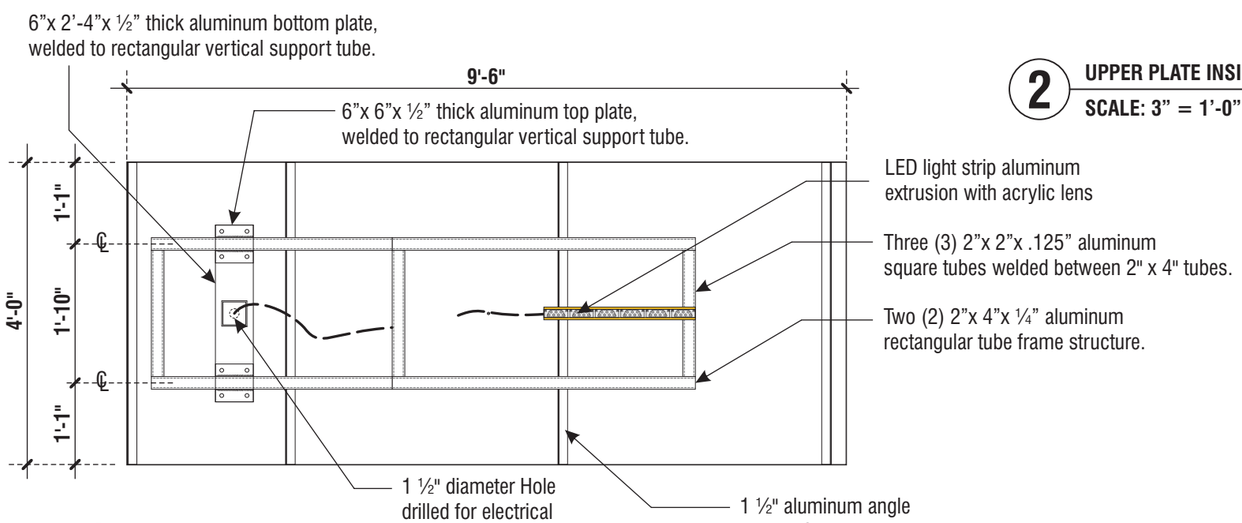

4 CANOPY - PLAN VIEW

SCALE: 1/2" = 1'-0"

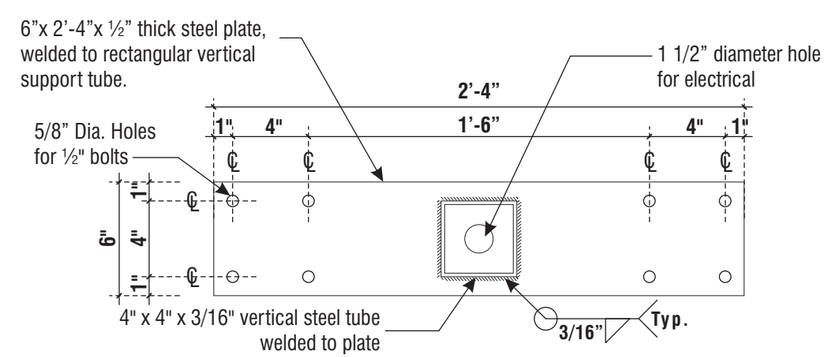

3 LOWER PLATE DETAIL

SCALE: 1 1/2" = 1'-0"

superior electrical advertising

1700 West Anaheim Street
Long Beach, California
90813-1195
Phone: 562.495.3808
Facsimile: 562.435.1867

www.superiorsigns.com

Project:
Nexx Burger

Address:
2940 E. Chapman Ave.
Orange, CA

Account Manager:
Stan Janocha

Scale: **AS NOTED** T.A.: **3.50**

Design No.:
19-11-6189-08

Reg. No.:

Revision History:
R0 11/19/19 CV New Drawing
R1 12/27/19 CV Revised per email
R2 3/4/20 mdm (1.5) add new site plan and elevations
R3 3/13/20 mdm (1.0) change pole sign, reposition menu.
R4 7/2/20 CV (1.0) changes made per emails.
R5 7/8/20 LR (1.25) New site plan
R6 10/13/20 mdm (1.25) New site plan,
R7 1/20/21 LR (2) Del G1 from tower and decrease logo on directional
R8 2/16/21 mdm (1.25) New site plan

ELECTRIC SIGN

This sign is intended to be installed in accordance with the requirements of Article 600 of the National Electrical Code and/or other applicable local codes. This includes proper grounding and bonding of the sign.

• CONSTRUCTION APPROVALS •

Acct. Mgr: Date:

Design: Date:

Mfg/QC: Date:

This is an original unpublished drawing created by Superior Electrical Advertising, Inc. It is submitted for your approval. It is not to be shown to anyone outside of your organization, nor is it to be reproduced, copied or exhibited in any fashion. The changing of colors, sizes, materials or illumination method does not alter the design. Ownership of this design is held by Superior Electrical Advertising, Inc. Authorization to use this design in any fashion must be obtained in writing from Superior Electrical Advertising, Inc.

© SEA 2019

Note: The colors depicted here are a graphic representation. Actual colors may vary. See color specifications.

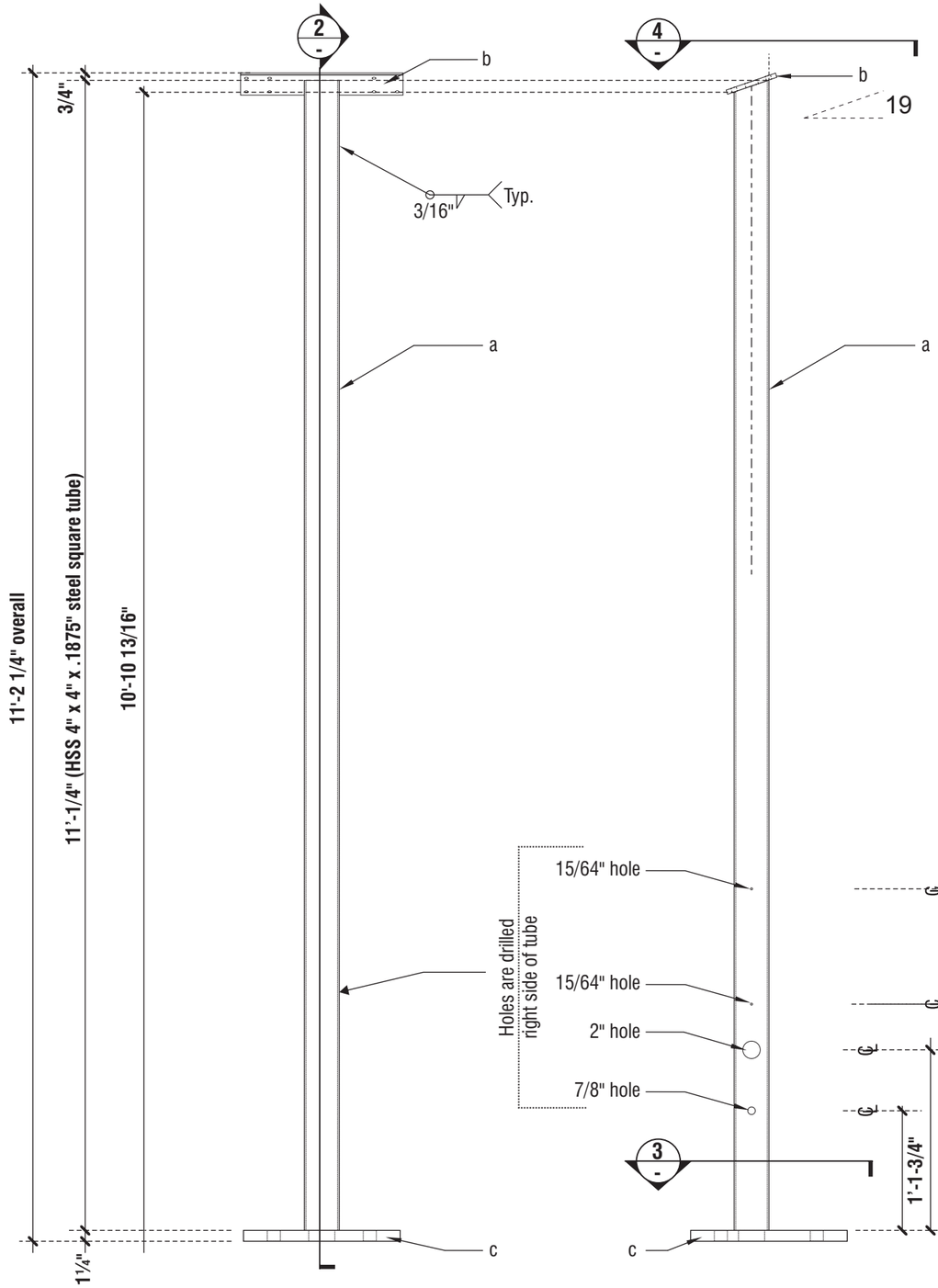

1 COLUMN SUPPORTS STEEL TUBE FRAME (FRONT VIEW)

SCALE: 3/4" = 1'-0"

2 COLUMN SUPPORTS STEEL TUBE FRAME (SIDE VIEW)

SCALE: 3/4" = 1'-0"

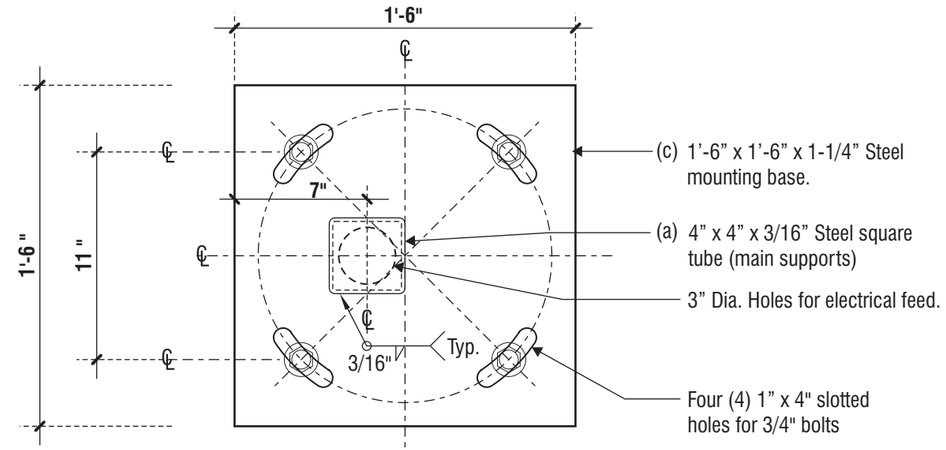

3 BASE PLATE DETAIL (PLAN VIEW)

SCALE: 1 ½" = 1'-0"

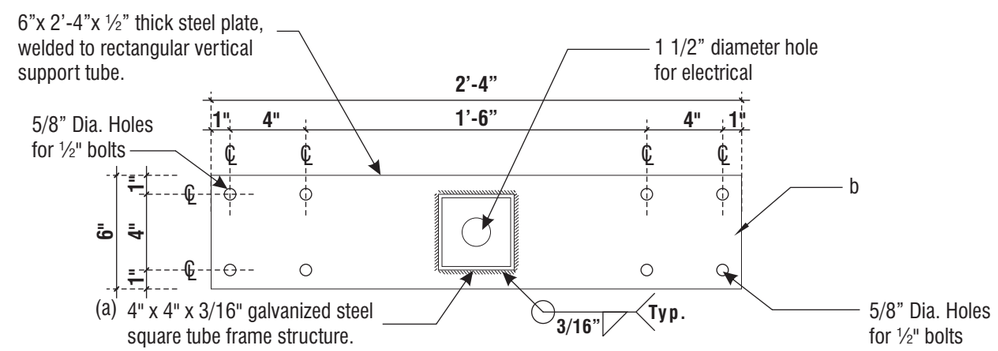

4 LOWER PLATE DETAIL

SCALE: 1 1/2" = 1'-0"

BILL OF MATERIAL

No. of Pieces	Ship Mark	Assembly Mark	Description	Length Ft.	Length In.	Remarks	Weight
1	1	a	4" x 4" x 3/16" HSS steel tube	10	4.625		
1		b	6" x 2'-4" x 1/2" steel plate				
1		c	18" x 18" x 1¼" steel plate				

superior electrical advertising
1700 West Anaheim Street
Long Beach, California
90813-1195
Phone: 562.495.3808
Facsimile: 562.435.1867
www.superiorsigns.com

Project:
Nexx Burger

Address:
2940 E. Chapman Ave.
Orange, CA

Account Manager:
Stan Janocha

Scale: **AS NOTED** T.A.: **3.50**

Design No.:
19-11-6189-08

Reg. No.:

Revision History:
R0 11/19/19 CV New Drawing
R1 12/27/19 CV Revised per email
R2 3/4/20 mdm (1.5) add new site plan and elevations
R3 3/13/20 mdm (1.0) change pole sign, reposition menu.
R4 7/2/20 CV (1.0) changes made per emails.
R5 7/8/20 LR (1.25) New site plan
R6 10/13/20 mdm (1.25) New site plan,
R7 1/20/21 LR (2) Del G1 from tower and decrease logo on directional
R8 2/16/21 mdm (1.25) New site plan

ELECTRIC SIGN

This sign is intended to be installed in accordance with the requirements of Article 600 of the National Electrical Code and/or other applicable local codes. This includes proper grounding and bonding of the sign.

• CONSTRUCTION APPROVALS •

Acct. Mgr: Date:

Design: Date:

Mfg/QC: Date:

This is an original unpublished drawing created by Superior Electrical Advertising, Inc. It is submitted for your approval. It is not to be shown to anyone outside of your organization, nor is it to be reproduced, copied or exhibited in any fashion. The changing of colors, sizes, materials or illumination method does not alter the design. Ownership of this design is held by Superior Electrical Advertising, Inc. Authorization to use this design in any fashion must be obtained in writing from Superior Electrical Advertising, Inc.

© SEA 2019

Note: The colors depicted here are a graphic representation. Actual colors may vary. See color specifications.

NOTE: Weather striping material placed along all areas where water may seep into the display.

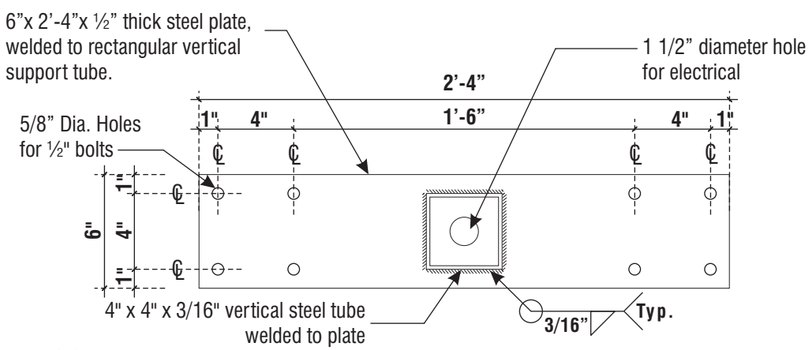

3 LOWER PLATE DETAIL

SCALE: 1 1/2” = 1’-0”

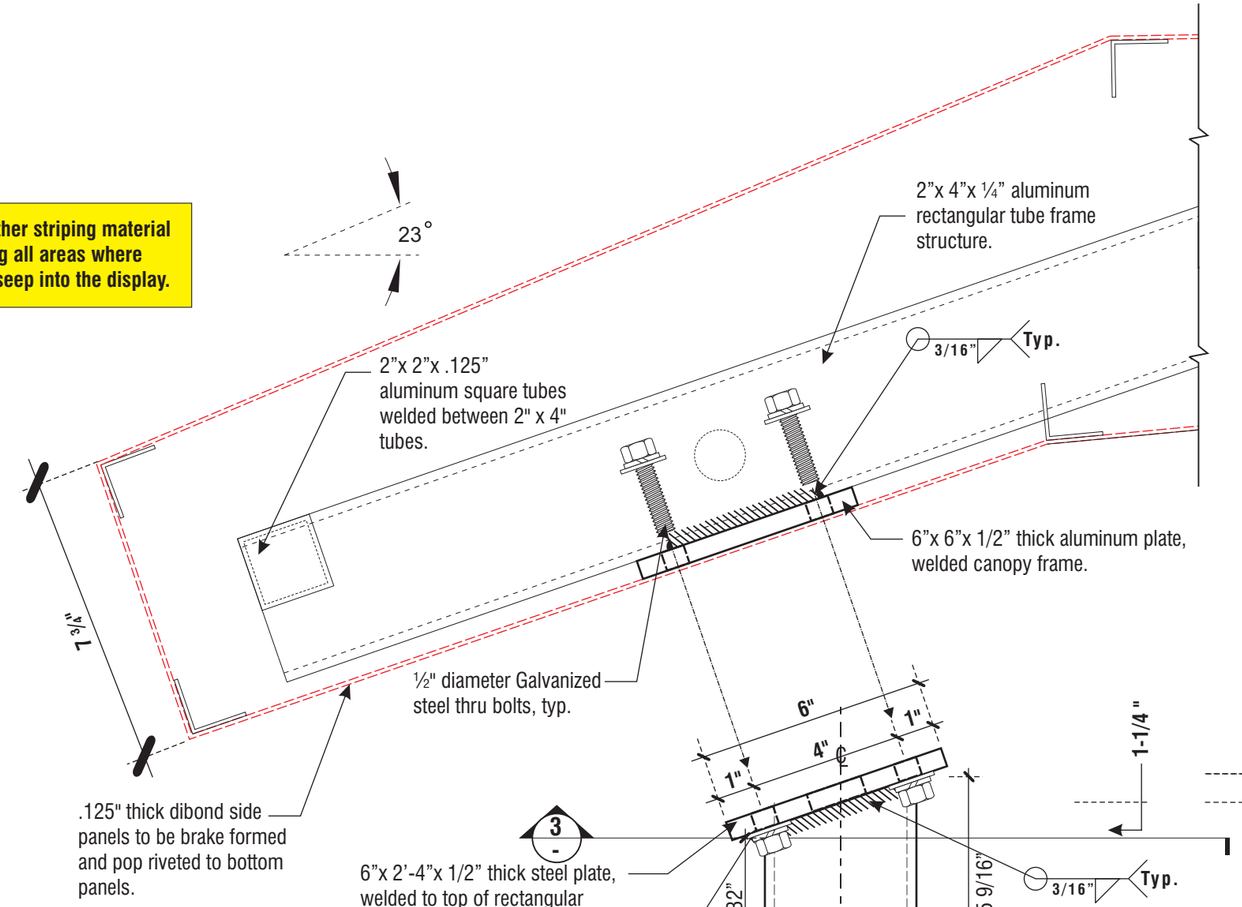

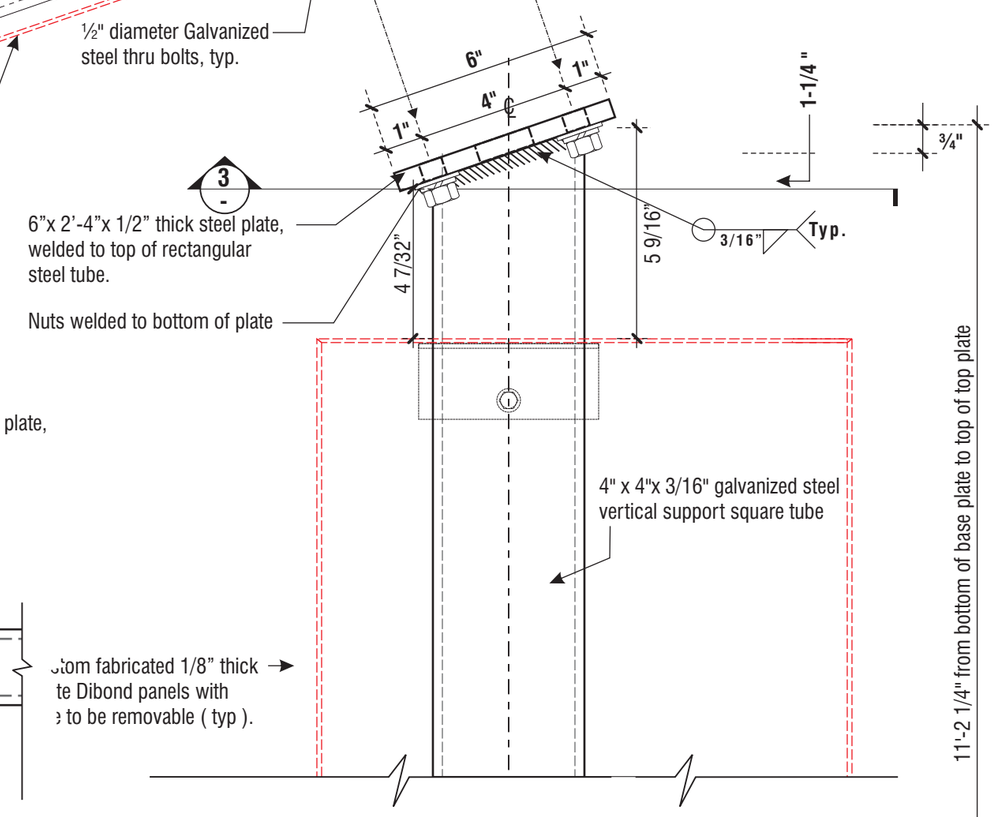

1 ROOF CANOPY MOUNTED PLATE DETAIL

SCALE: 3” = 1’-0”

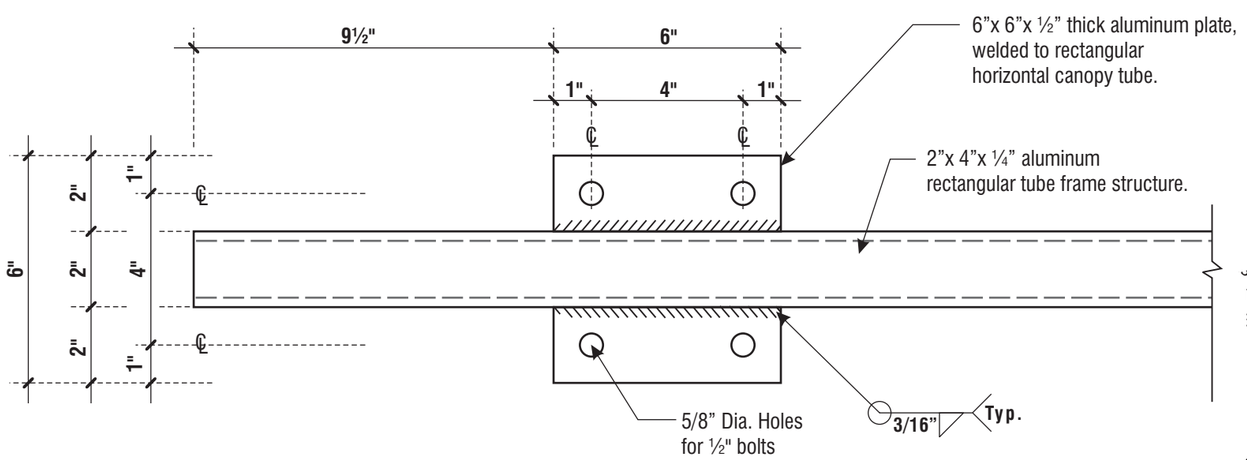

2 UPPER PLATE INSIDE CANOPY

SCALE: 3” = 1’-0”

superior electrical advertising

1700 West Anaheim Street
Long Beach, California
90813-1195
Phone: 562.495.3808
Facsimile: 562.435.1867

www.superiorsigns.com

Project:
Nexx Burger

Address:
2940 E. Chapman Ave.
Orange, CA

Account Manager:
Stan Janocha

Scale: **AS NOTED** T.A.: **3.50**

Design No.:
19-11-6189-08

Reg. No.:

Revision History:
R0 11/19/19 CV New Drawing
R1 12/27/19 CV Revised per email
R2 3/4/20 mdm (1.5) add new site plan and elevations
R3 3/13/20 mdm (1.0) change pole sign, reposition menu.
R4 7/2/20 CV (1.0) changes made per emails.
R5 7/8/20 LR (1.25) New site plan
R6 10/13/20 mdm (1.25) New site plan,
R7 1/20/21 LR (2) Del G1 from tower and decrease logo on directional
R8 2/16/21 mdm (1.25) New site plan

ELECTRIC SIGN

This sign is intended to be installed in accordance with the requirements of Article 600 of the National Electrical Code and/or other applicable local codes. This includes proper grounding and bonding of the sign.

• CONSTRUCTION APPROVALS •

Acct. Mgr: Date:

Design: Date:

Mfg/QC: Date:

This is an original unpublished drawing created by Superior Electrical Advertising, Inc. It is submitted for your approval. It is not to be shown to anyone outside of your organization, nor is it to be reproduced, copied or exhibited in any fashion. The changing of colors, sizes, materials or illumination method does not alter the design. Ownership of this design is held by Superior Electrical Advertising, Inc. Authorization to use this design in any fashion must be obtained in writing from Superior Electrical Advertising, Inc.

© SEA 2019

Note: The colors depicted here are a graphic representation. Actual colors may vary. See color specifications.

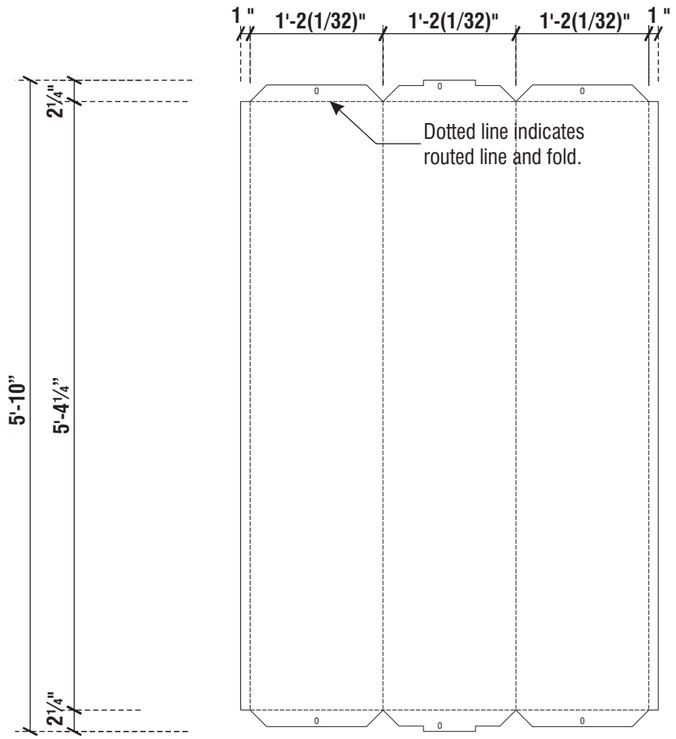

1 **TOP BRAKE FORMED DIBOND PANEL - THREE SIDES (FRONT, SIDE AND BACK)**

SCALE: ¾"= 1'-0"

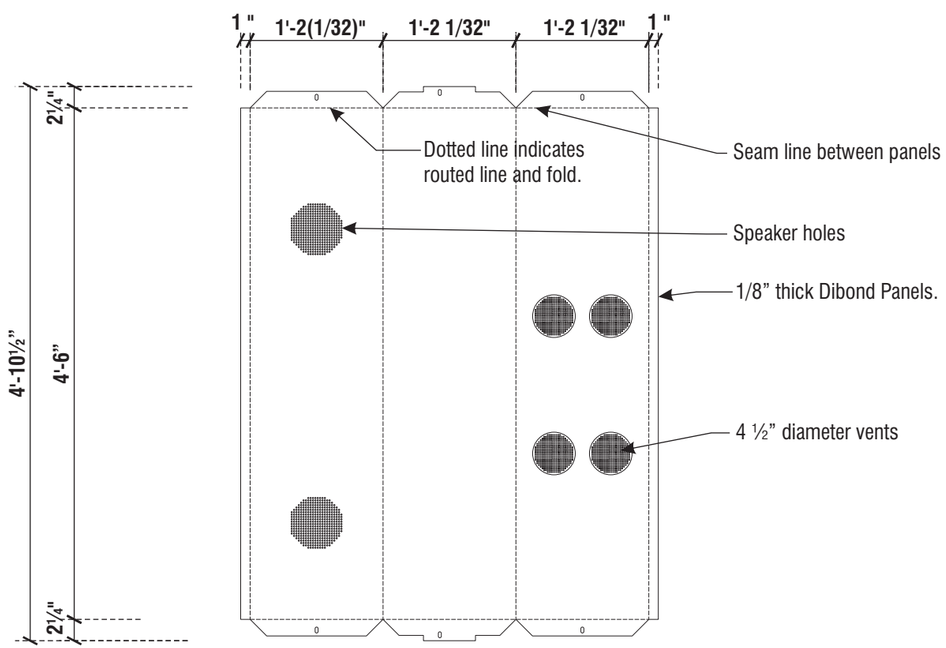

2 **BOTTOM BRAKE FORMED DIBOND PANEL - THREE SIDES (FRONT, SIDE AND BACK)**

SCALE: ¾"= 1'-0"

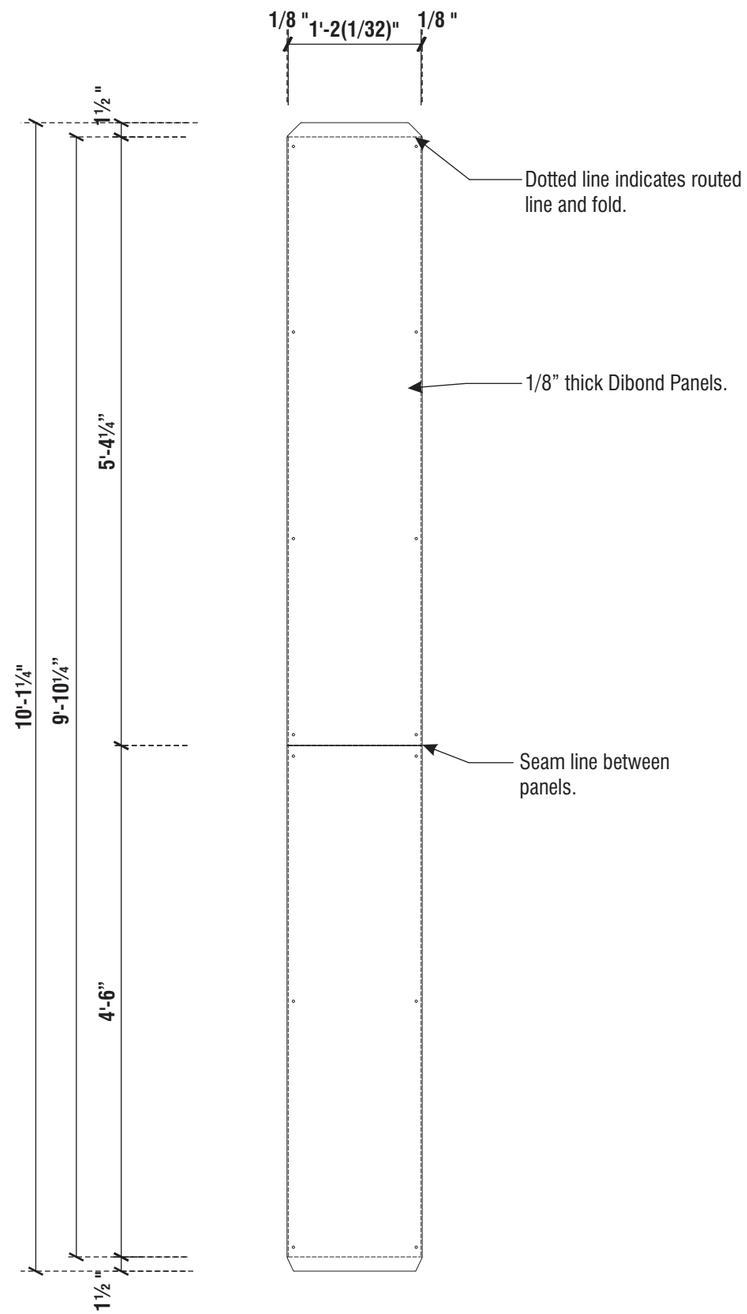

3 **BRAKE FORMED DIBOND PANEL - REMOVABLE (RIGHT SIDE PANELS)**

SCALE: ¾"= 1'-0"

superior electrical advertising

1700 West Anaheim Street
Long Beach, California
90813-1195
Phone: 562.495.3808
Facsimile: 562.435.1867

www.superiorsigns.com

Project:
Nexx Burger

Address:
2940 E. Chapman Ave.
Orange, CA

Account Manager:
Stan Janocha

Scale: **AS NOTED** T.A.: **3.50**

Design No.:
19-11-6189-08

Reg. No.:

Revision History:
R0 11/19/19 CV New Drawing
R1 12/27/19 CV Revised per email
R2 3/4/20 mdm (1.5) add new site plan and elevations
R3 3/13/20 mdm (1.0) change pole sign, reposition menu.
R4 7/2/20 CV (1.0) changes made per emails.
R5 7/8/20 LR (1.25) New site plan
R6 10/13/20 mdm (1.25) New site plan,
R7 1/20/21 LR (2) Del G1 from tower and decrease logo on directional
R8 2/16/21 mdm (1.25) New site plan

ELECTRIC SIGN

This sign is intended to be installed in accordance with the requirements of Article 600 of the National Electrical Code and/or other applicable local codes. This includes proper grounding and bonding of the sign.

• CONSTRUCTION APPROVALS •

Acct. Mgr: Date:

Design: Date:

Mfg/QC: Date:

This is an original unpublished drawing created by Superior Electrical Advertising, Inc. It is submitted for your approval. It is not to be shown to anyone outside of your organization, nor is it to be reproduced, copied or exhibited in any fashion. The changing of colors, sizes, materials or illumination method does not alter the design. Ownership of this design is held by Superior Electrical Advertising, Inc. Authorization to use this design in any fashion must be obtained in writing from Superior Electrical Advertising, Inc.

© SEA 2019

Note: The colors depicted here are a graphic representation. Actual colors may vary. See color specifications.

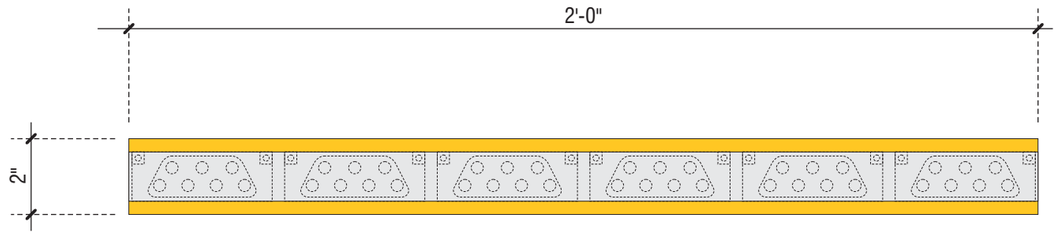

1 LED LIGHT STRIP
SCALE: 3" = 1'-0"

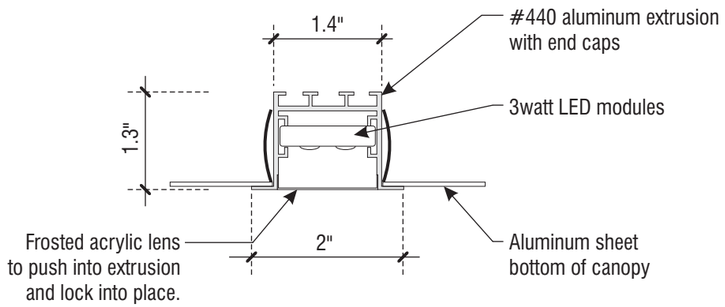

2 SECTION THROUGH LED LIGHT STRIP
SCALE: half scale

ELECTRICAL LOAD:

LED light fixture with
Six (6) cool white LED modules @ 3.0 watts each UL#E325964
One (1) 35watt 24volt Power supply @

Total electrical load of sign without speakers and camera is .5 amps at 120 volt.

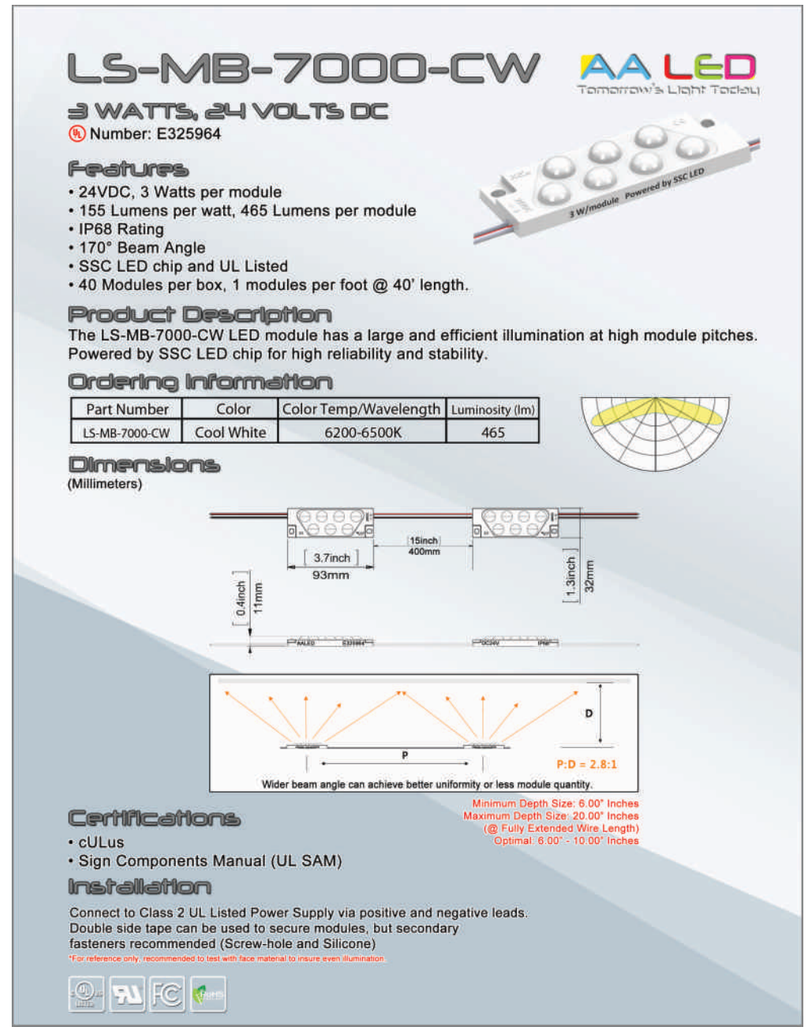

LS-MB-7000-CW

AA LED
Tomorrow's Light Today

3 WATTS, 24 VOLTS DC

Number: E325964

Features
- 24VDC, 3 Watts per module
- 155 Lumens per watt, 465 Lumens per module
- IP68 Rating
- 170° Beam Angle
- SSC LED chip and UL Listed
- 40 Modules per box, 1 modules per foot @ 40' length.

Product Description
The LS-MB-7000-CW LED module has a large and efficient illumination at high module pitches. Powered by SSC LED chip for high reliability and stability.

Ordering Information

Part Number	Color	Color Temp/Wavelength	Luminosity (lm)
LS-MB-7000-CW	Cool White	6200-6500K	465

Dimensions
(Millimeters)

Certifications
- cULus
- Sign Components Manual (UL SAM)

Installation
Connect to Class 2 UL Listed Power Supply via positive and negative leads. Double side tape can be used to secure modules, but secondary fasteners recommended (Screw-hole and Silicone)
*For reference only. recommended to test with face material to insure even illumination

superior electrical advertising
1700 West Anaheim Street
Long Beach, California
90813-1195
Phone: 562.495.3808
Facsimile: 562.435.1867
www.superiorsigns.com

Project:
Nexx Burger

Address:
2940 E. Chapman Ave.
Orange, CA

Account Manager:
Stan Janocha

Scale: **AS NOTED** T.A.: **3.50**

Design No.:
19-11-6189-08

Reg. No.:

Revision History:
R0 11/19/19 CV New Drawing
R1 12/27/19 CV Revised per email
R2 3/4/20 mdm (1.5) add new site plan and elevations
R3 3/13/20 mdm (1.0) change pole sign, reposition menu.
R4 7/2/20 CV (1.0) changes made per emails.
R5 7/8/20 LR (1.25) New site plan
R6 10/13/20 mdm (1.25) New site plan,
R7 1/20/21 LR (2) Del G1 from tower and decrease logo on directional
R8 2/16/21 mdm (1.25) New site plan

ELECTRIC SIGN

This sign is intended to be installed in accordance with the requirements of Article 600 of the National Electrical Code and/or other applicable local codes. This includes proper grounding and bonding of the sign.

• CONSTRUCTION APPROVALS •
Acct. Mgr: Date:
Design: Date:
Mfg/QC: Date:

This is an original unpublished drawing created by Superior Electrical Advertising, Inc. It is submitted for your approval. It is not to be shown to anyone outside of your organization, nor is it to be reproduced, copied or exhibited in any fashion. The changing of colors, sizes, materials or illumination method does not alter the design. Ownership of this design is held by Superior Electrical Advertising, Inc. Authorization to use this design in any fashion must be obtained in writing from Superior Electrical Advertising, Inc.
© SEA 2019

Note: The colors depicted here are a graphic representation. Actual colors may vary. See color specifications.

2 TOP VIEWS

SCALE: 3/8" = 1'-0"

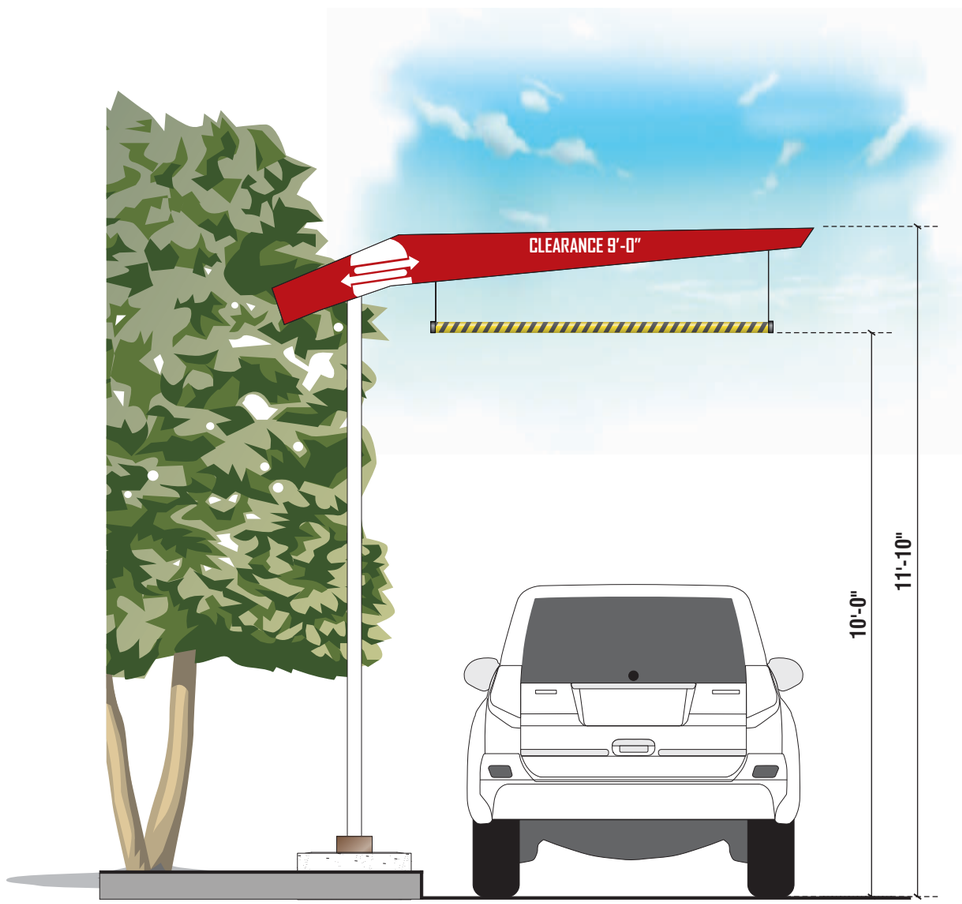

E SIDE VIEW - DRIVE THRU CLEARANCE BAR

QUANTITY: ONE (1) REQUIRED

SCALE: 3/8" = 1'-0"

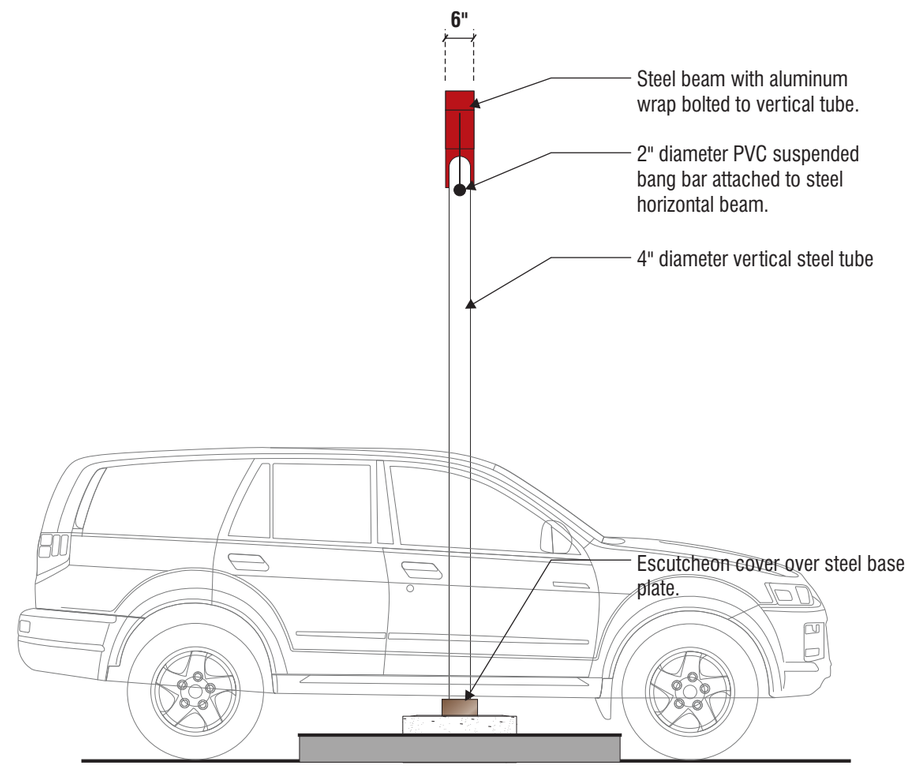

1 FRONT ELEVATION - DRIVE THRU CLEARANCE BAR

SCALE: 3/8" = 1'-0"

superior electrical advertising
1700 West Anaheim Street
Long Beach, California
90813-1195
Phone: 562.495.3808
Facsimile: 562.435.1867
www.superiorsigns.com

Project:
Nexx Burger

Address:
2940 E. Chapman Ave.
Orange, CA

Account Manager:
Stan Janocha

Scale: **AS NOTED** T.A.: **3.50**

Design No.:
19-11-6189-08

Reg. No.:

Revision History:
R0 11/19/19 CV New Drawing
R1 12/27/19 CV Revised per email
R2 3/4/20 mdm (1.5) add new site plan and elevations
R3 3/13/20 mdm (1.0) change pole sign, reposition menu.
R4 7/2/20 CV (1.0) changes made per emails.
R5 7/8/20 LR (1.25) New site plan
R6 10/13/20 mdm (1.25) New site plan,
R7 1/20/21 LR (2) Del G1 from tower and decrease logo on directional
R8 2/16/21 mdm (1.25) New site plan

ELECTRIC SIGN

This sign is intended to be installed in accordance with the requirements of Article 600 of the National Electrical Code and/or other applicable local codes. This includes proper grounding and bonding of the sign.

• CONSTRUCTION APPROVALS •

Acct. Mgr: Date:

Design: Date:

Mfg/QC: Date:

This is an original unpublished drawing created by Superior Electrical Advertising, Inc. It is submitted for your approval. It is not to be shown to anyone outside of your organization, nor is it to be reproduced, copied or exhibited in any fashion. The changing of colors, sizes, materials or illumination method does not alter the design. Ownership of this design is held by Superior Electrical Advertising, Inc. Authorization to use this design in any fashion must be obtained in writing from Superior Electrical Advertising, Inc.

© SEA 2019

Note: The colors depicted here are a graphic representation. Actual colors may vary. See color specifications.

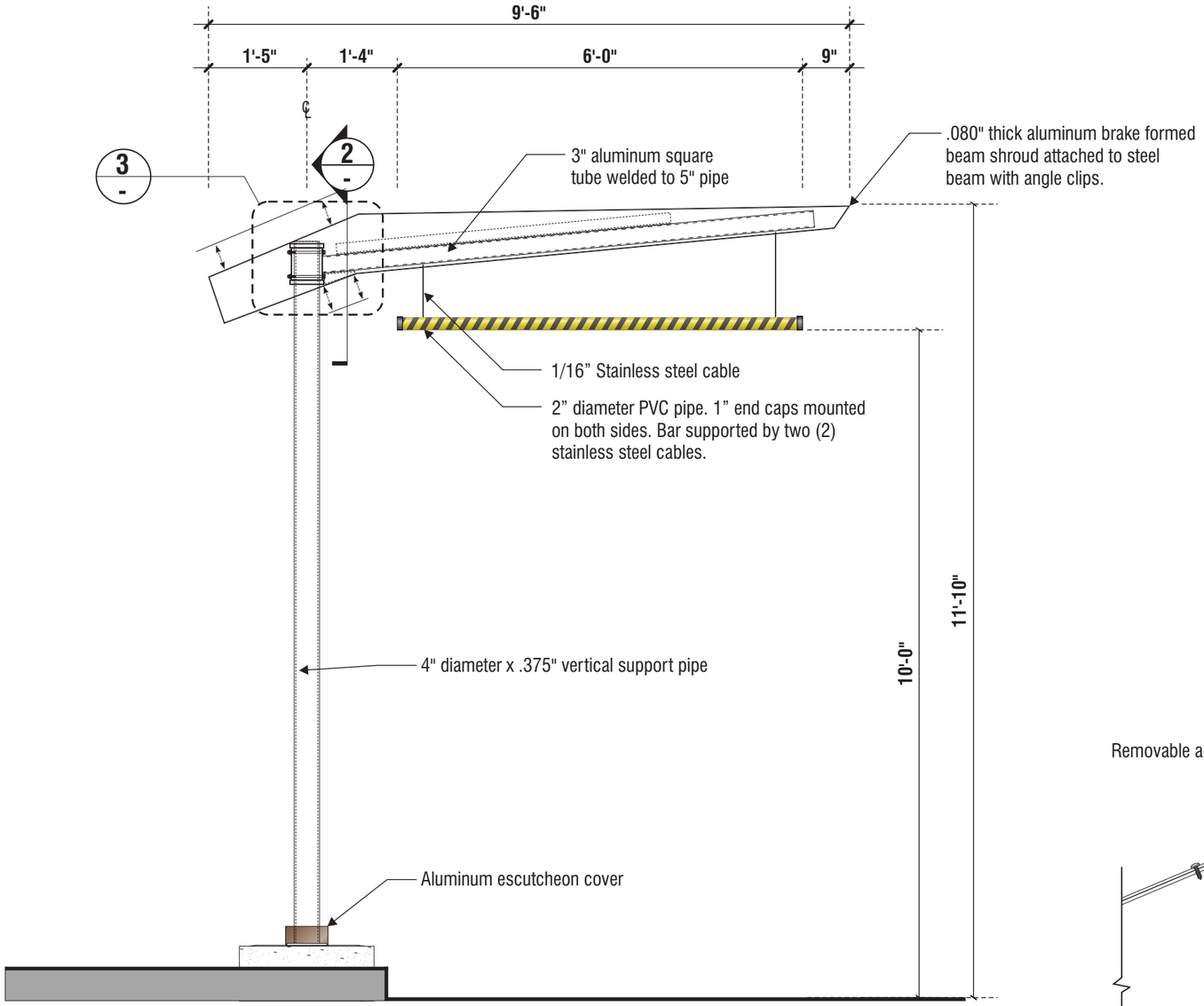

1 SIDE VIEW - STRUCTURAL DETAIL

SCALE: ½" = 1'-0"

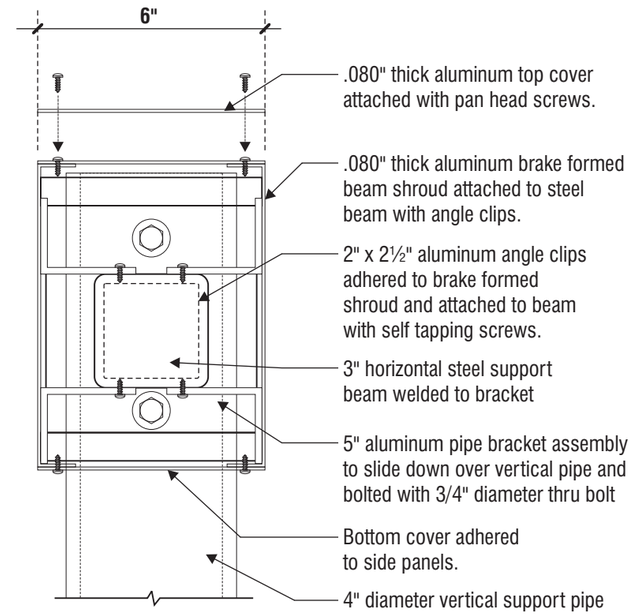

2 SECTION DETAIL THROUGH BEAM

SCALE: 3" = 1'-0"

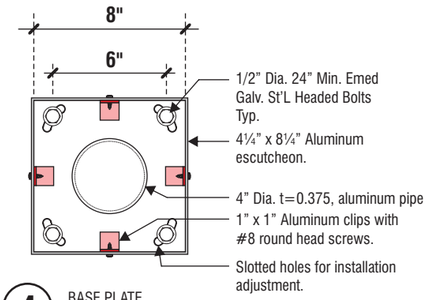

4 BASE PLATE

SCALE: 1 ½"= 1'-0"

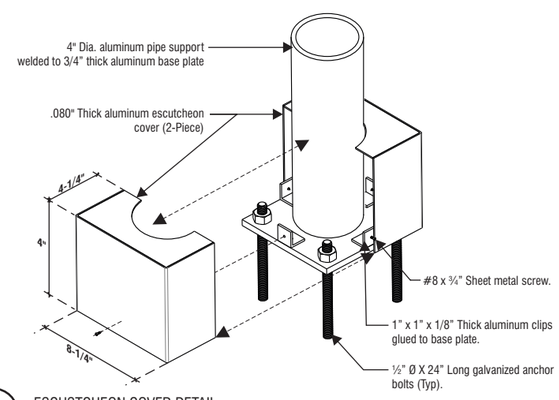

5 ESCUSTCHEON COVER DETAIL

SCALE: NTS

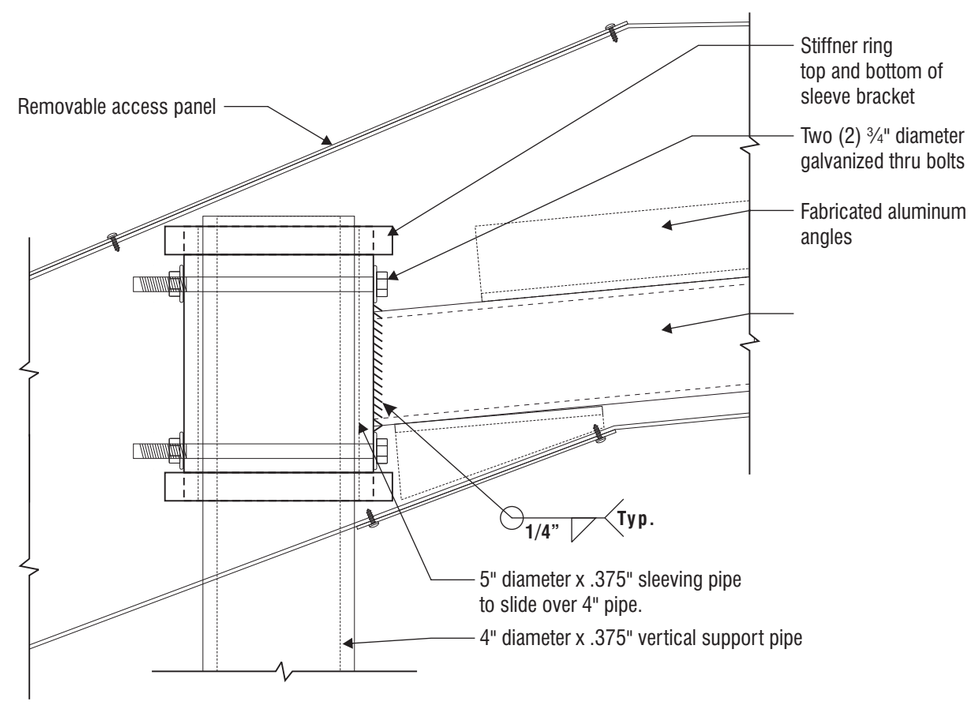

3 SECTION DETAIL THROUGH BEAM CONNECTION

SCALE: 3" = 1'-0"

superior electrical advertising
1700 West Anaheim Street
Long Beach, California
90813-1195
Phone: 562.495.3808
Facsimile: 562.435.1867
www.superiorsigns.com

Project:
Nexx Burger

Address:
2940 E. Chapman Ave.
Orange, CA

Account Manager:
Stan Janocha

Scale: **AS NOTED** T.A.: **3.50**

Design No.:
19-11-6189-08

Reg. No.:

Revision History:
R0 11/19/19 CV New Drawing
R1 12/27/19 CV Revised per email
R2 3/4/20 mdm (1.5) add new site plan and elevations
R3 3/13/20 mdm (1.0) change pole sign, reposition menu.
R4 7/2/20 CV (1.0) changes made per emails.
R5 7/8/20 LR (1.25) New site plan
R6 10/13/20 mdm (1.25) New site plan,
R7 1/20/21 LR (2) Del G1 from tower and decrease logo on directional
R8 2/16/21 mdm (1.25) New site plan

ELECTRIC SIGN

This sign is intended to be installed in accordance with the requirements of Article 600 of the National Electrical Code and/or other applicable local codes. This includes proper grounding and bonding of the sign.

• CONSTRUCTION APPROVALS •

Acct. Mgr: Date:

Design: Date:

Mfg/QC: Date:

This is an original unpublished drawing created by Superior Electrical Advertising, Inc. It is submitted for your approval. It is not to be shown to anyone outside of your organization, nor is it to be reproduced, copied or exhibited in any fashion. The changing of colors, sizes, materials or illumination method does not alter the design. Ownership of this design is held by Superior Electrical Advertising, Inc. Authorization to use this design in any fashion must be obtained in writing from Superior Electrical Advertising, Inc.

© SEA 2019

Note: The colors depicted here are a graphic representation. Actual colors may vary. See color specifications.

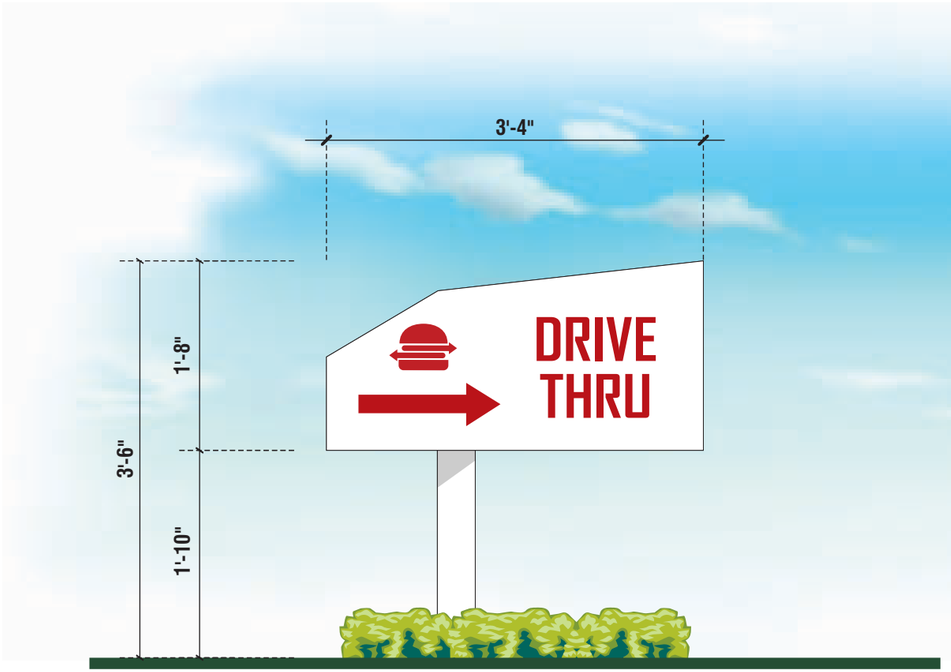

SIDE A

F ILLUMINATED ALUMINUM DOUBLE FACE DIRECTIONAL SIGN — 5.5 SQ. FT.

QUANTITY: ONE (1) REQUIRED — SCALE: 3/4" = 1'-0"

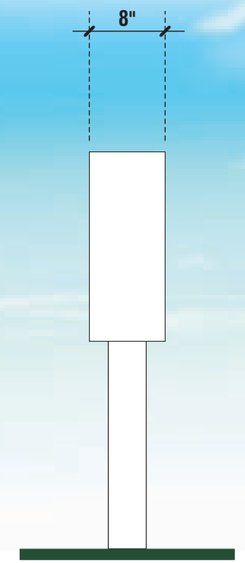

SIDE VIEW

SIDE B

1 OPPOSITE SIDE

SCALE: 3/4" = 1'-0"

MAX 6.0 SQ. FT. ALLOWED

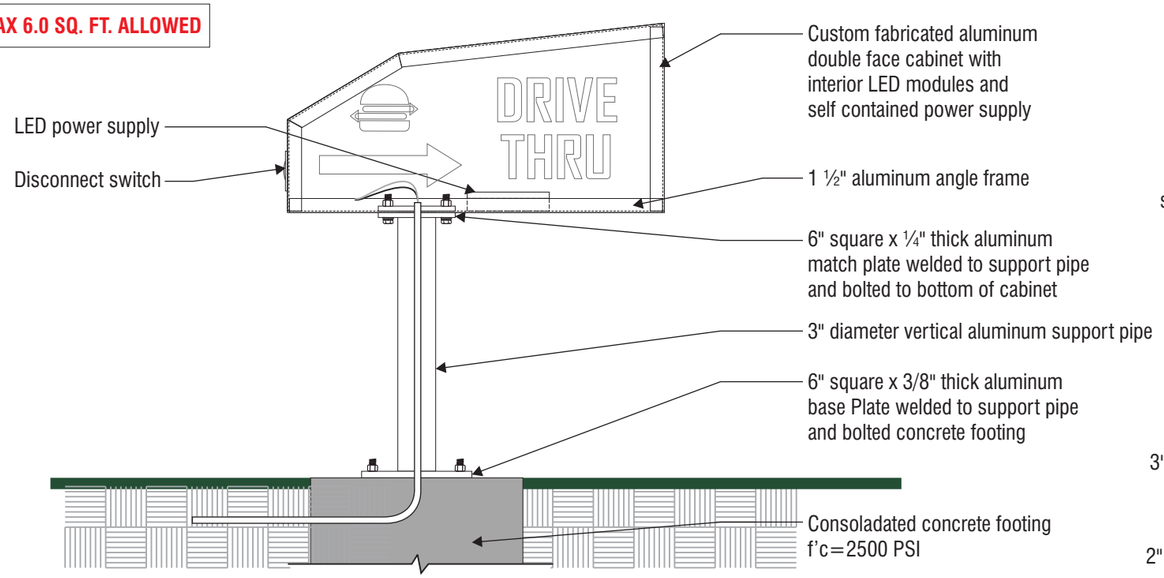

2 FRONT VIEW - STRUCTURAL DETAIL

SCALE: 3/4" = 1'-0"

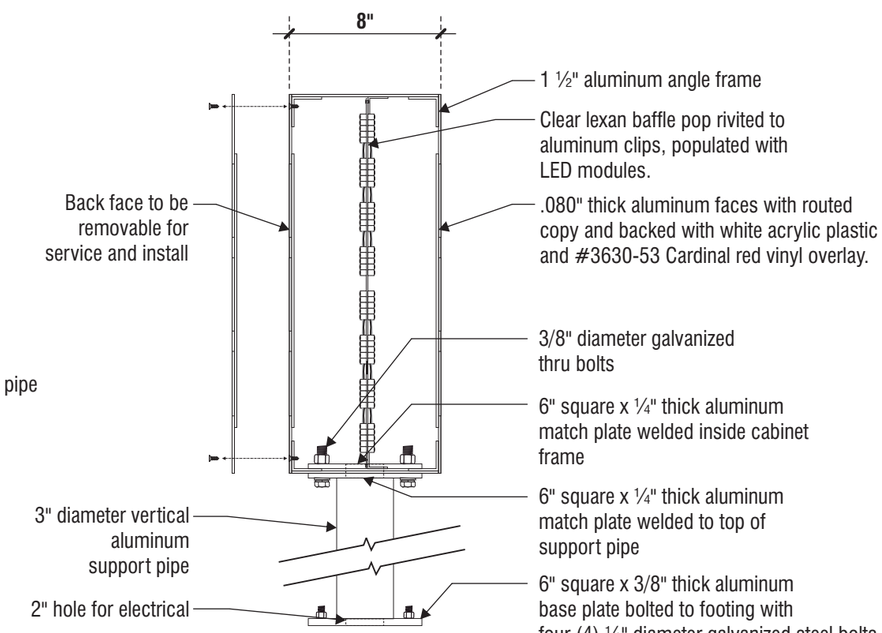

3 SIDE VIEW - STRUCTURAL DETAIL

SCALE: 1 ½" = 1'-0"

superior electrical advertising

1700 West Anaheim Street
Long Beach, California
90813-1195
Phone: 562.495.3808
Facsimile: 562.435.1867

www.superiorsigns.com

Project:
Nexx Burger

Address:
2940 E. Chapman Ave.
Orange, CA

Account Manager:
Stan Janocha

Scale: **AS NOTED** — T.A.: **3.50**

Design No.:
19-11-6189-08

Reg. No.:

Revision History:
R0 11/19/19 CV New Drawing
R1 12/27/19 CV Revised per email
R2 3/4/20 mdm (1.5) add new site plan and elevations
R3 3/13/20 mdm (1.0) change pole sign, reposition menu.
R4 7/2/20 CV (1.0) changes made per emails.
R5 7/8/20 LR (1.25) New site plan
R6 10/13/20 mdm (1.25) New site plan,
R7 1/20/21 LR (2) Del G1 from tower and decrease logo on directional
R8 2/16/21 mdm (1.25) New site plan

ELECTRIC SIGN

This sign is intended to be installed in accordance with the requirements of Article 600 of the National Electrical Code and/or other applicable local codes. This includes proper grounding and bonding of the sign.

• CONSTRUCTION APPROVALS •

Acct. Mgr: Date:

Design: Date:

Mfg/QC: Date:

This is an original unpublished drawing created by Superior Electrical Advertising, Inc. It is submitted for your approval. It is not to be shown to anyone outside of your organization, nor is it to be reproduced, copied or exhibited in any fashion. The changing of colors, sizes, materials or illumination method does not alter the design. Ownership of this design is held by Superior Electrical Advertising, Inc. Authorization to use this design in any fashion must be obtained in writing from Superior Electrical Advertising, Inc.

© SEA 2019

Note: The colors depicted here are a graphic representation. Actual colors may vary. See color specifications.

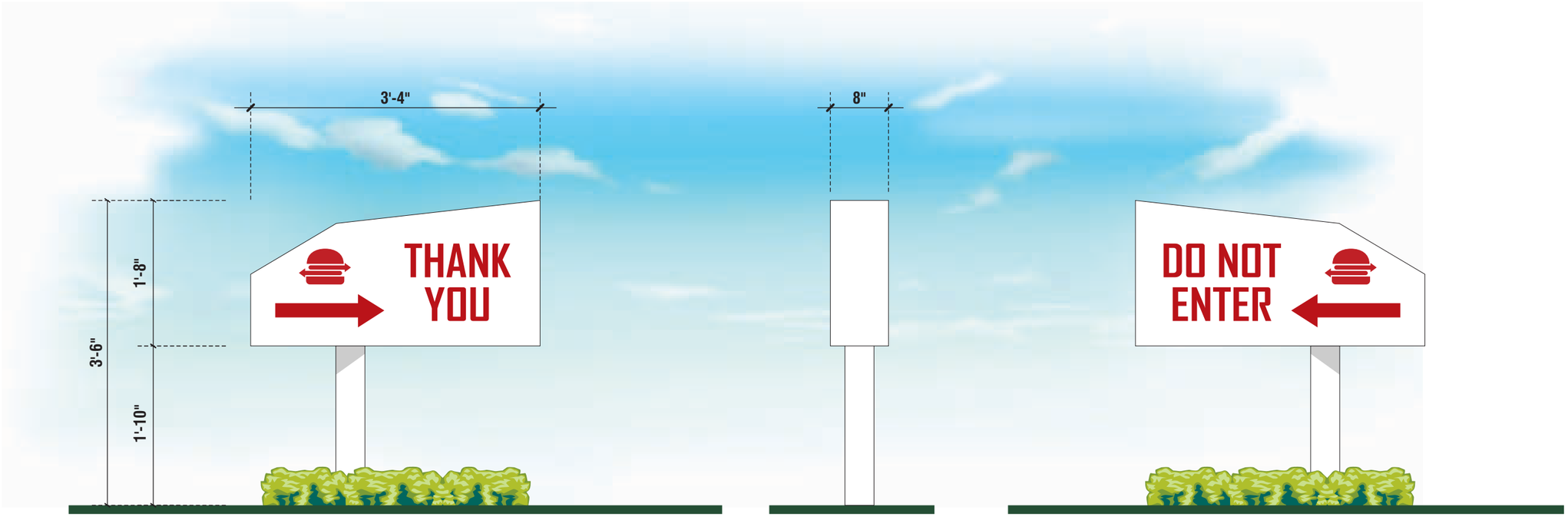

SIDE A

J **ILLUMINATED ALUMINUM DOUBLE FACE DIRECTIONAL SIGN** **5.5 SQ. FT.**

QUANTITY: ONE (1) REQUIRED **SCALE: 3/4" = 1'-0"**

SIDE VIEW

1 **OPPOSITE SIDE**

SCALE: 3/4" = 1'-0"

SIDE B

MAX 6.0 SQ. FT. ALLOWED

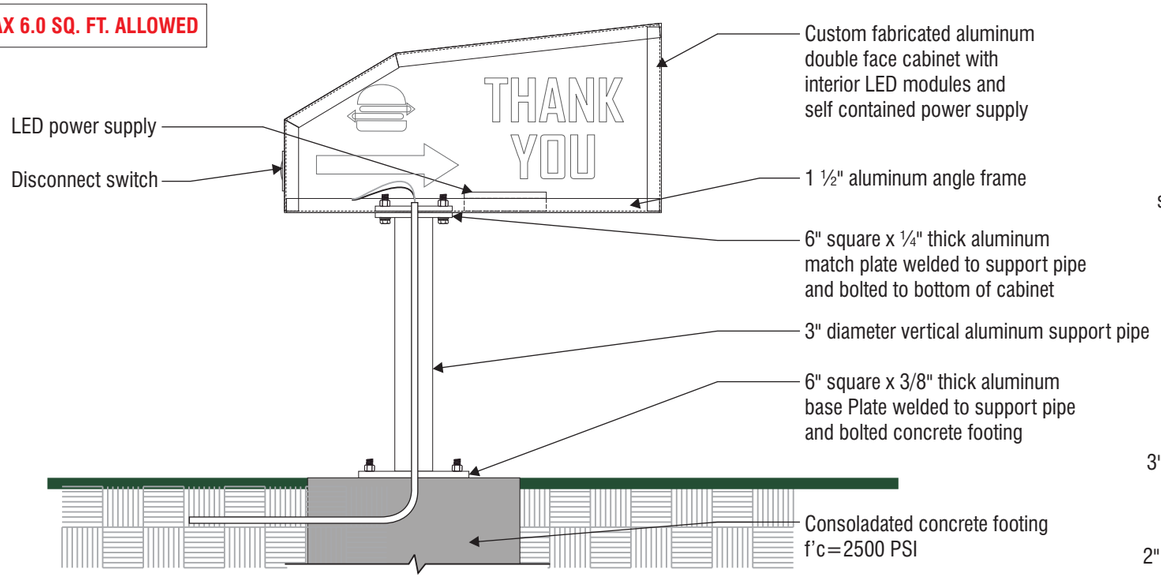

2 **FRONT VIEW - STRUCTURAL DETAIL**

SCALE: 3/4" = 1'-0"

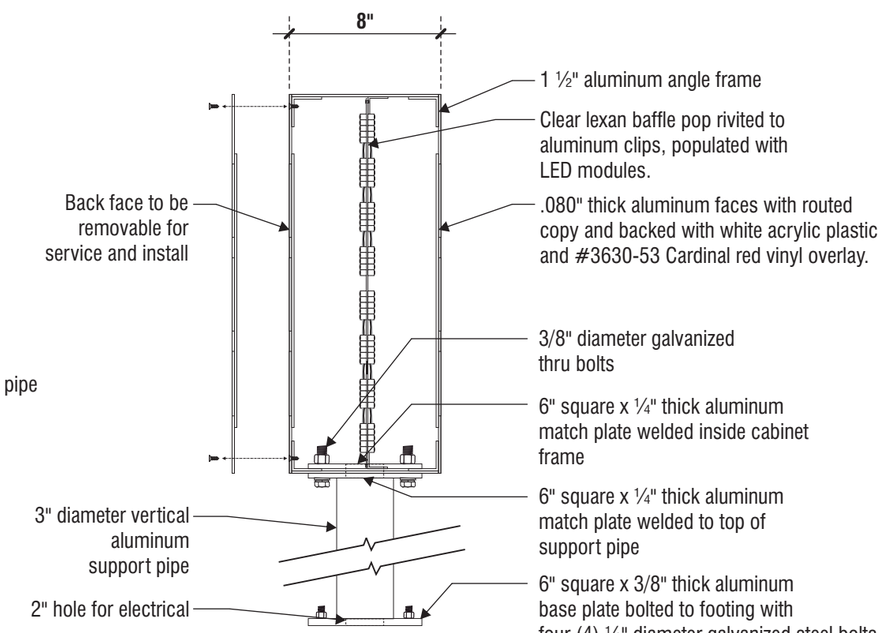

3 **SIDE VIEW - STRUCTURAL DETAIL**

SCALE: 1 ½" = 1'-0"

superior electrical advertising

1700 West Anaheim Street
Long Beach, California
90813-1195
Phone: 562.495.3808
Facsimile: 562.435.1867

www.superiorsigns.com

Project:
Nexx Burger

Address:
2940 E. Chapman Ave.
Orange, CA

Account Manager:
Stan Janocha

Scale: **AS NOTED** T.A.: **3.50**

Design No.:
19-11-6189-08

Reg. No.:

Revision History:
R0 11/19/19 CV New Drawing
R1 12/27/19 CV Revised per email
R2 3/4/20 mdm (1.5) add new site plan and elevations
R3 3/13/20 mdm (1.0) change pole sign, reposition menu.
R4 7/2/20 CV (1.0) changes made per emails.
R5 7/8/20 LR (1.25) New site plan
R6 10/13/20 mdm (1.25) New site plan,
R7 1/20/21 LR (2) Del G1 from tower and decrease logo on directional
R8 2/16/21 mdm (1.25) New site plan

ELECTRIC SIGN

This sign is intended to be installed in accordance with the requirements of Article 600 of the National Electrical Code and/or other applicable local codes. This includes proper grounding and bonding of the sign.

• CONSTRUCTION APPROVALS •

Acct. Mgr: Date:

Design: Date:

Mfg/QC: Date:

This is an original unpublished drawing created by Superior Electrical Advertising, Inc. It is submitted for your approval. It is not to be shown to anyone outside of your organization, nor is it to be reproduced, copied or exhibited in any fashion. The changing of colors, sizes, materials or illumination method does not alter the design. Ownership of this design is held by Superior Electrical Advertising, Inc. Authorization to use this design in any fashion must be obtained in writing from Superior Electrical Advertising, Inc.

© SEA 2019

Note: The colors depicted here are a graphic representation. Actual colors may vary. See color specifications.

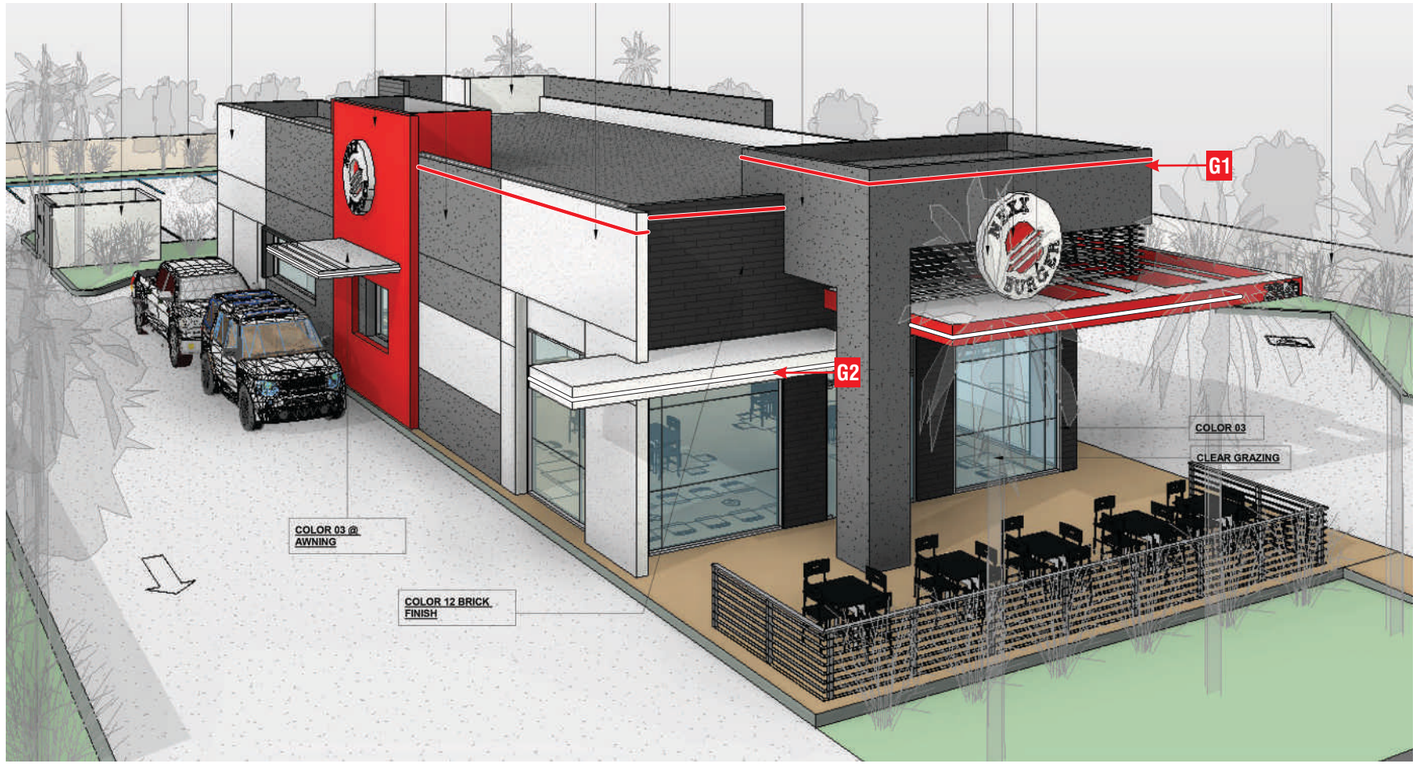

G1	3D LED BORDER VIEW
G2	QUANTITY: TWO (2) REQUIRED

SCALE: NTS

G1 = RED (TOP ONLY)

G2 = WARM WHITE (AWNINGS ONLY)

SPECIFICATIONS:

ILLUMINATION : SLOAN COLORLINE RED AND WARM WHITE RIGID LED BARS.

NOTE: FIELD MEASUREMENTS REQUIRED
LIGHTING INTENSITY SHALL NOT EXCEED ONE-HALF FOOT-CANDLE AT THE PROPERTY LINE

NOTE SIGN G PRODUCT IS DIMMABLE

G1 TOTAL LENGTH: 115' - 10"

G2 TOTAL LENGTH: 106' - 8"

superior electrical advertising
1700 West Anaheim Street
Long Beach, California
90813-1195
Phone: 562.495.3808
Facsimile: 562.435.1867
www.superiorsigns.com

Project:
Nexx Burger

Address:
2940 E. Chapman Ave.
Orange, CA

Account Manager:
Stan Janocha

Scale: **AS NOTED** T.A.: **3.50**

Design No.:
19-11-6189-08

Reg. No.:

Revision History:
R0 11/19/19 CV New Drawing
R1 12/27/19 CV Revised per email
R2 3/4/20 mdm (1.5) add new site plan and elevations
R3 3/13/20 mdm (1.0) change pole sign, reposition menu.
R4 7/2/20 CV (1.0) changes made per emails.
R5 7/8/20 LR (1.25) New site plan
R6 10/13/20 mdm (1.25) New site plan,
R7 1/20/21 LR (2) Del G1 from tower and decrease logo on directional
R8 2/16/21 mdm (1.25) New site plan

ELECTRIC SIGN

This sign is intended to be installed in accordance with the requirements of Article 600 of the National Electrical Code and/or other applicable local codes. This includes proper grounding and bonding of the sign.

• CONSTRUCTION APPROVALS •

Acct. Mgr: Date:

Design: Date:

Mfg/QC: Date:

This is an original unpublished drawing created by Superior Electrical Advertising, Inc. It is submitted for your approval. It is not to be shown to anyone outside of your organization, nor is it to be reproduced, copied or exhibited in any fashion. The changing of colors, sizes, materials or illumination method does not alter the design. Ownership of this design is held by Superior Electrical Advertising, Inc. Authorization to use this design in any fashion must be obtained in writing from Superior Electrical Advertising, Inc.

© SEA 2019

Note: The colors depicted here are a graphic representation. Actual colors may vary. See color specifications.

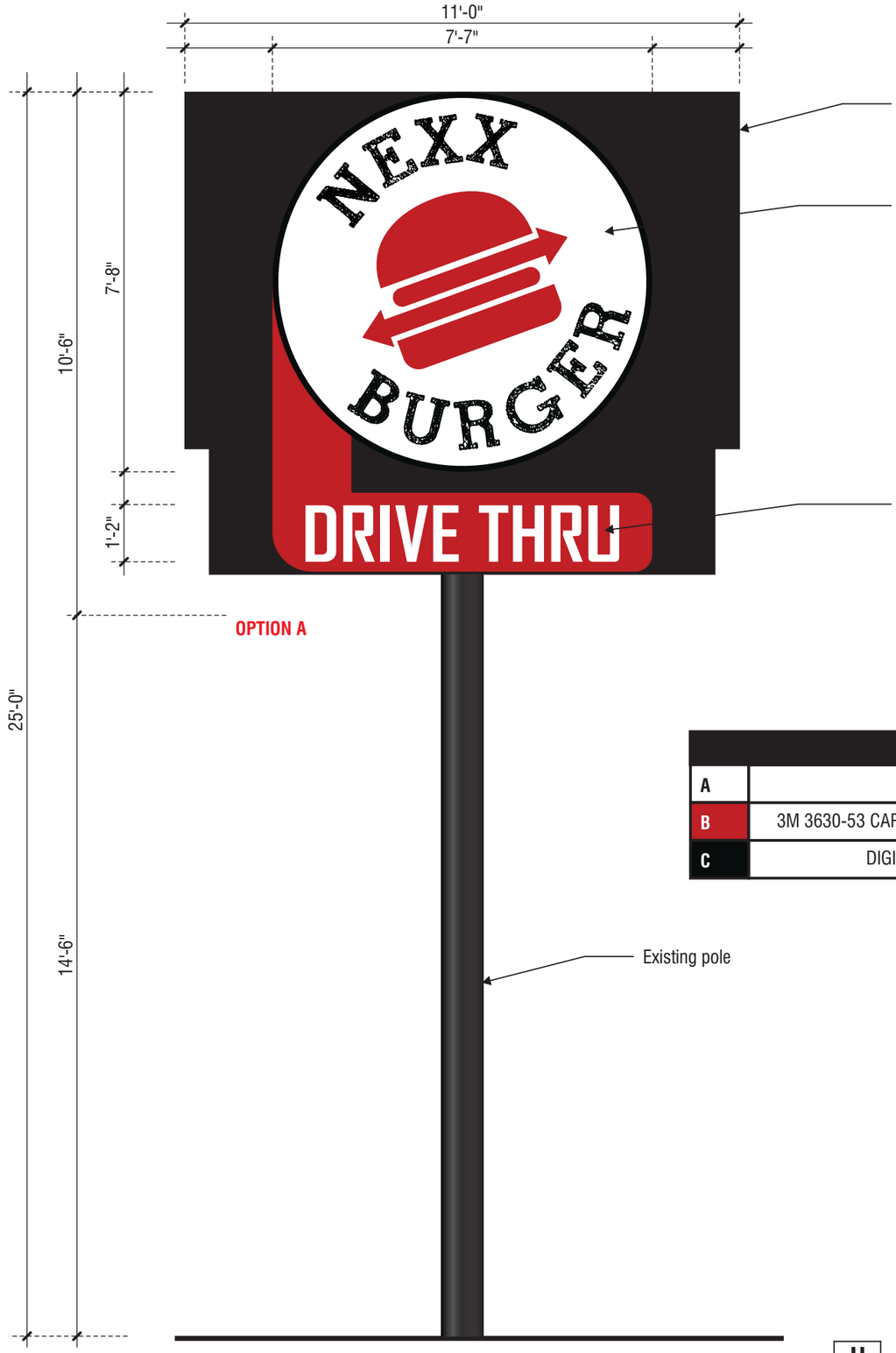

COLOR SCHEDULE	
A	BEHR PR-W15 PURE WHITE
B	3M 3630-53 CARDINAL RED VINYL, PMS 187 C PAINTED RETURNS
C	DIGITAL PRINT, BLACK PAINTED RETURNS

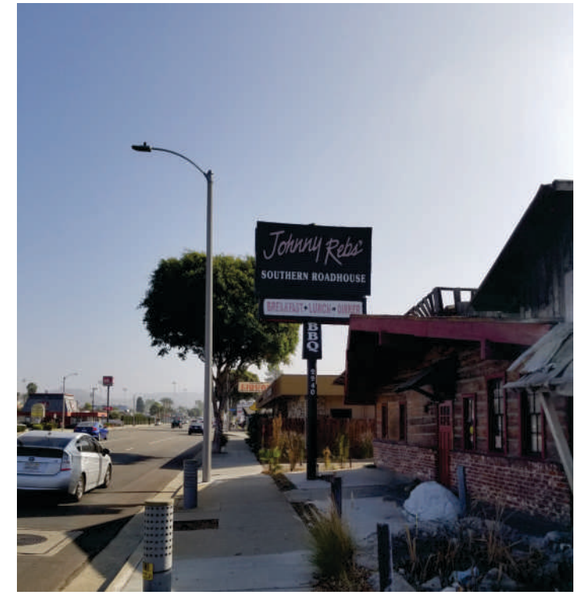

1 EXISTING CONDITION

SCALE: NTS

2 PROPOSED FACE CHANGE FOR EXISTING DOUBLE FACE POLE SIGN

SCALE: NTS

H CUSTOM FABRICATED ALUMINUM D/F POLE SIGN — 86.6 SQ. FT.

QUANTITY: TWO (2) CABINET MOUNTED BACK TO BACK — SCALE: 3/8" = 1'-0"

superior electrical advertising

1700 West Anaheim Street
Long Beach, California
90813-1195
Phone: 562.495.3808
Facsimile: 562.435.1867

www.superiorsigns.com

Project:
Nexx Burger

Address:
2940 E. Chapman Ave.
Orange, CA

Account Manager:
Stan Janocha

Scale: **AS NOTED** T.A.: **3.50**

Design No.:
19-11-6189-08

Reg. No.:

Revision History:
R0 11/19/19 CV New Drawing
R1 12/27/19 CV Revised per email
R2 3/4/20 mdm (1.5) add new site plan and elevations
R3 3/13/20 mdm (1.0) change pole sign, reposition menu.
R4 7/2/20 CV (1.0) changes made per emails.
R5 7/8/20 LR (1.25) New site plan
R6 10/13/20 mdm (1.25) New site plan,
R7 1/20/21 LR (2) Del G1 from tower and decrease logo on directional
R8 2/16/21 mdm (1.25) New site plan

ELECTRIC SIGN

This sign is intended to be installed in accordance with the requirements of Article 600 of the National Electrical Code and/or other applicable local codes. This includes proper grounding and bonding of the sign.

• CONSTRUCTION APPROVALS •

Acct. Mgr: Date:

Design: Date:

Mfg/QC: Date:

This is an original unpublished drawing created by Superior Electrical Advertising, Inc. It is submitted for your approval. It is not to be shown to anyone outside of your organization, nor is it to be reproduced, copied or exhibited in any fashion. The changing of colors, sizes, materials or illumination method does not alter the design. Ownership of this design is held by Superior Electrical Advertising, Inc. Authorization to use this design in any fashion must be obtained in writing from Superior Electrical Advertising, Inc.

© SEA 2019

Note: The colors depicted here are a graphic representation. Actual colors may vary. See color specifications.